SFIBRAL
FIBER CEMENT PANELS

www.sfibral.com

SFIBRAL Design & Installation Manual

Remarks

Disclaimer

Remarks
This SFIBRAL - Design & Installation Manual (hereinafter - DIM) provides technical information regarding design and installation. Refer to area manager and local distributor for further information such as:

- Terms of delivery
- Pricing
- Products and colors
- Lead time, etc.

More general information available on
www.sfibral.com
info@sfibral.com

Validity of DIM
Please consult your local distributor and or the Technical Advisor prior to the commencement of shop drawings or installation for the most current DIM guide. The current DIM can always be found at www.sfibral.com.

Product warranty
10 year warranty for the functional quality of panels and accessories, provided that the installation is in full compliance with this DIM.

Maritime conditions
Maritime conditions call the use for stainless steel rivets. Those may be used on steel or anodized aluminum sub frame.
Maritime conditions are considered 50m to 1km (0.03 to 0.6 miles) from the sea. Material specification for sub frame, fasteners and accessories to cater for maritime conditions according to local standards.

Marking, small elements, etc.
In general, leave at least 6 mm between the edge of the board and the installation - in this case the movement of the board will not be restricted. Install structural mounting points behind the panels in accordance with the requirements. Lightweight installations can be glued to the panel, but cannot be mounted between the panels without leaving a gap.

Advantages of fiber cement products

- Maximum protection against
- weather
- Excellent longevity
- Easy installation in any climate
- Almost no maintenance required
- Proven details
- No cracks, paint or sealant problems
- High sustainability
- Non combustible

Project specific ordering
Subtle visual differences may occur between product batches. Therefore we recommend ordering by job or specific elevation if ordering in phases.

Disclaimer
The information and recommendations contained in this Design & Installation Manual are offered as a service to architects, constructors, installer and other persons involved with our products and are not intended to relieve them from their own responsibility. Information contained herein is for guidance only. The information provided in this Manual was obtained from sources believed to be reliable.

The manufacturer makes no warranty concerning the accuracy of the content of this DIM and shall not be liable for claims relating to any use regardless of whether it is claimed that the information or recommendations are inaccurate, incomplete, or otherwise misleading.
The information and recommendations herein are intended to be used with the judgment and experience of professional personnel competent to evaluate the significance and limitations of the material contained. SFIBRAL disclaims any guarantees or warranties, expressed or implied, for anything described or illustrated herein and assumes no responsibility or liability for damages of any kind, including - without limitation - bodily harm, injury or damage to property inferred from this DIM or the use of the materials described herein.

Program

Sizes

Overview panel sizes

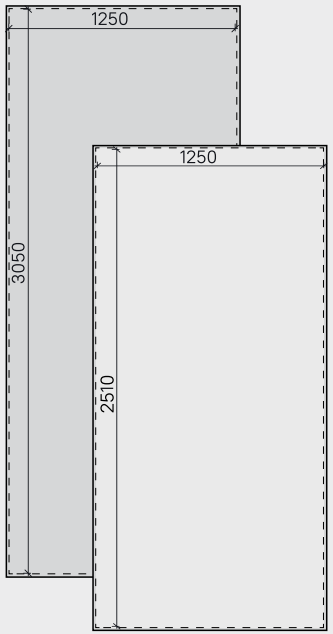

SFIBRALmax. NET panel sizes

Overview

SFIBRAL		SFIBRAL Grey	SFIBRAL Color	SFIBRAL Structure
Thickness	mm	8/6	8/6	8/6
Weight	ck.kg/m²	15.7/11.7	15.7/11.7	15.7/11.7
Untrimmed panels Format (mm)	**max. NET panel sizes**			
3070x1270	3050x1250	•	•	•
2530x1270	2510x1250	•	•	•

Product data

- Density> 1.65g/cm3
- Modulus of elasticity ca. 15'000 MPa
- Design resistance for bending ca. 9.0 MPa
- Thermal expansion coefficient 0.01 mm/m
- Fire classification according to NFPA 285 EN 13 501-1 & A2-s1, d0
- Frostresistance and durabitliy under EN 12467
- Thermal range -60° C to + 80°C

Application

SFIBRAL panels can be attached to vertical timber or metal profiles. Suitable for new facades or existing cladding renovations.

Untrimmed full size panels

Untrimmed panels will only be provided to approved fabricators. Untrimmed SFIBRAL panels must be trimmed 10mm on all four sides.

Program

Adhesive

Adhesive application

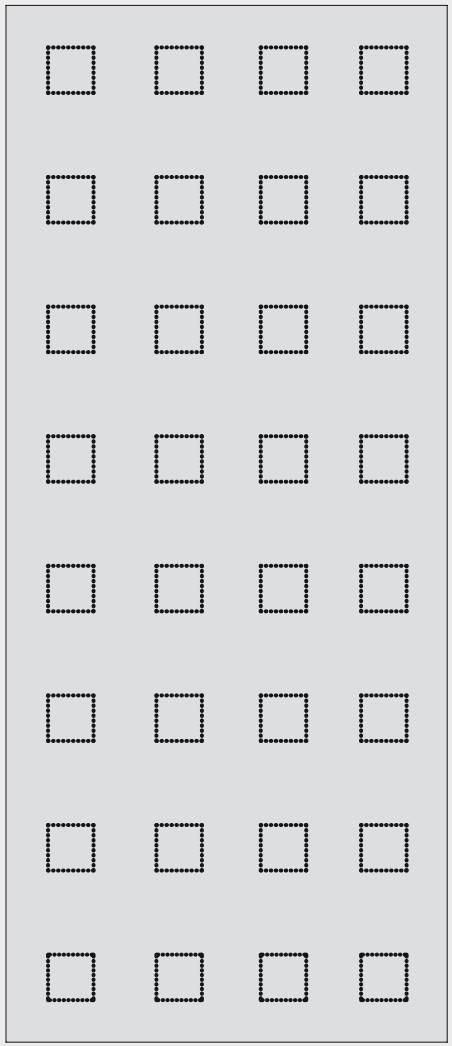

Adhesive technology

Specially ordered adhesive panels are signified by printed squares on the backside of the panel.
Please consult with your adhesive manufacture prior to installation.

General requirements

Glue manufacturer's instructions for use must be strictly followed regarding all aspects, including:

- Cleanliness of panels and support profiles
- Panel and air temperature Air moisture content
- Scrubbing, priming and other treatment of inner side
- Other conditions

Support profiles

- For exterior application the panels may be glued to aluminium supports only.
- Sub framing to be approved by glue manufacturer prior to starting the installation.

Panel ordering

Panels ordered for adhesive application are called ARSB and are available upon request at time of order. Standard panels cannot be used for adhesive application.

Warranty

Panel manufacturer provides functional warranty for the panels only. Warranty for the attachment of the panels to be obtained by glue manufacturer.

Program

Fasteners

Fasteners

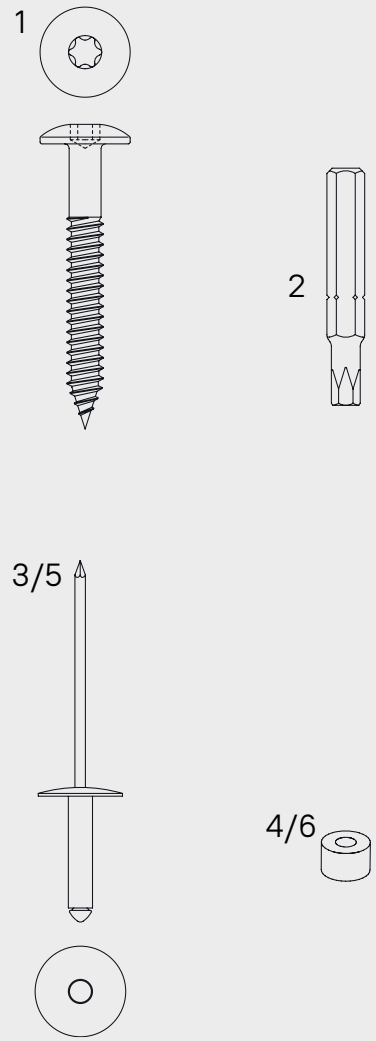

To timber battens
1—Screw, inox, saucer head Ø 11 mm, T20 drive, blank or powder coated

- 4.8x38 mm

2—Torx bit T20 W.

To aluminium profiles
3—Aluminium rivet, head 14/16 mm,

- Al/A2 4.8x16,9-K16
- Al/A2 5x18-K14

4—Fixed point sleeve aluminum type 8

To steel profiles
5—Stainless steel rivet, head Ø 15 mm, blank or powder coated

- 4.0 x18 -K15, 9–14 mm grip range

6—Fixed point sleeve stainless steel type 8

Maritime conditions
Maritime conditions call the use for stainless steel rivets. Those may be used on steel or anodized aluminum sub frame.
Maritime conditions are considered within a distance of 1 km (0.6 miles) from the sea. Material specification for sub frame, fasteners and accessories to cater for maritime conditions according to local standards.

Design

General remarks

Corner zone

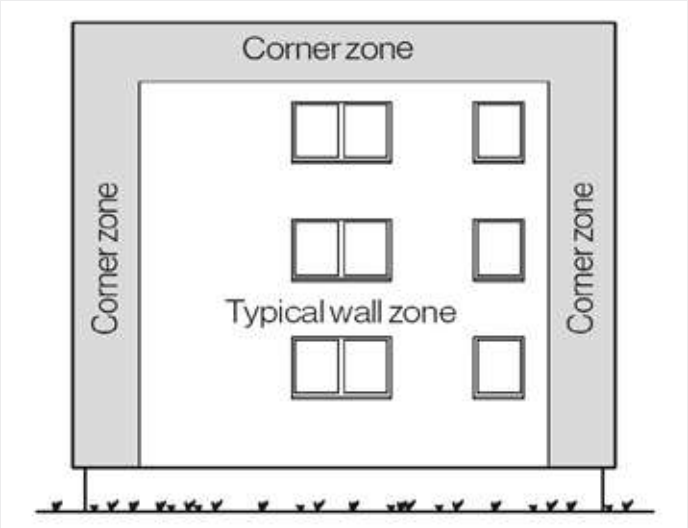

Min. manufacturer cavity depth:

Mandatory for the validity of the warranty.

Cladding height	min. cavity
< 6 m	20 mm
5 - 15 m	25 mm
15 - 25 m	30mm
25 - 50 m	40mm
50 - 75 m	50mm
75 - 100 m	75mm
> 100 m	100mm

Application
SFIBRAL cladding panels can be attached to vertical supports made of timber, aluminium or steel.

Windload
Always consider local standards when determining panel fasterner differences. This is especially important for tall buildings, for buildings with special shapes and for high wind exposure areas.

Ventilation cavity
Building tolerances must be allowed for. The cavity may not be reduced by horizontal profiles or any stray objects such as loose insulation and other materials.

Building expansion joints
The buildings structural expansion joints should be considered when designing subframe systems. Structural expansion joints must be applied to sub frame and cladding as provided to the building structure.

Ventilation cavity
Minimum airflow at the backside of the panels should be no less than 20mm. It must be ensured that this cavity is 100% free from obstructions in vertical airflow.

Ventilation cavity with perforated horizontal subframe components
Min ventilation gap to be 40 mm. Horizontal profiles should allow min. 75% airflow.

Wind load zones
As per scheme there are two wind load zones. The corner zones generally are subject to increased negative wind load due to turbulence at the edges of the building. The applicable wind load values must be determined in the cladding specification.

Design

General remarks

Panel support
Panel must be supported on an even surface. If perforated angles are placed between the panel and batten/ vertical profile the closure piece must not exceed 0.8 mm. Perforated angles have to allow proper ventilation entrance with a min. perforation of 60%. The use of an aluminium mesh is possible. It has a high ventilation ratio, thin material thickness (no push out of panel) and is easy to install.

Material compatibility
Untreated aluminum material such as window sills, frames, etc. is not compatible with cement and must be protected against dust from drilling panels, etc. For exterior applications aluminum components are to be used in anodized, powder-coated or with protective films.

Timber battens

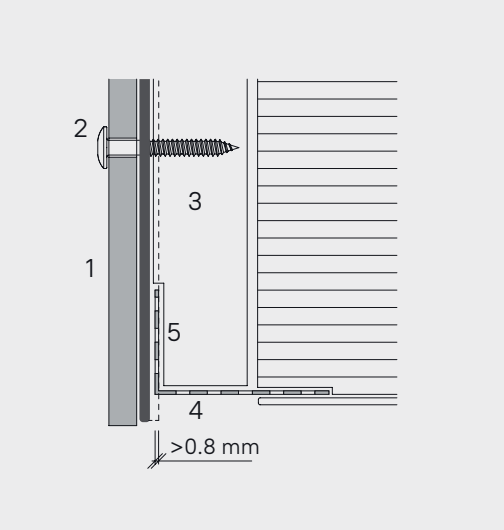

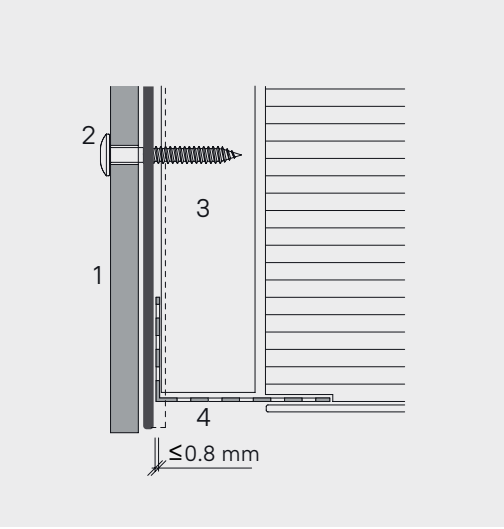

Metal profiles

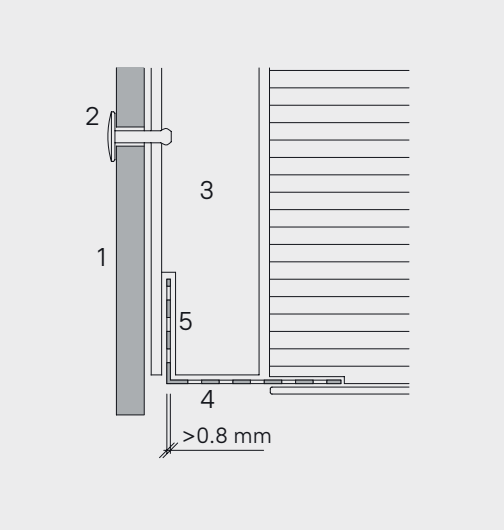

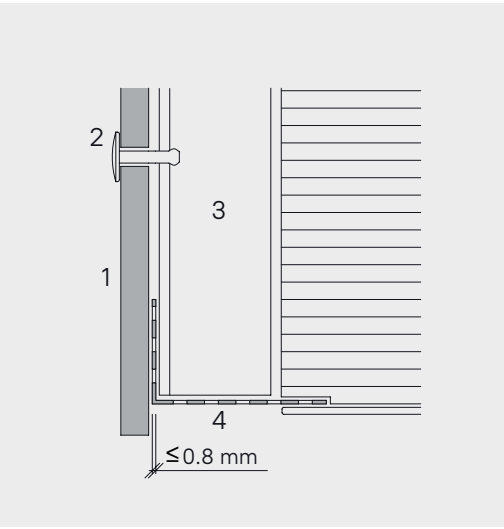

Sealant material
Generally to keep the cladding maintenance free the use of sealants should be avoided. Where the use of sealant is unavoidable Polyurethane, Acrylic or Hybrid Polymer products would be best suitable. Before applying any sealant to fiber cement material the compatibility must be checked as certain materials leave permanent staining on panel surface.

1 SFIBRAL
2 Fastener
3 Panel support
4 Perforated angle
5 Recess

Design

General remarks

Sub frame types

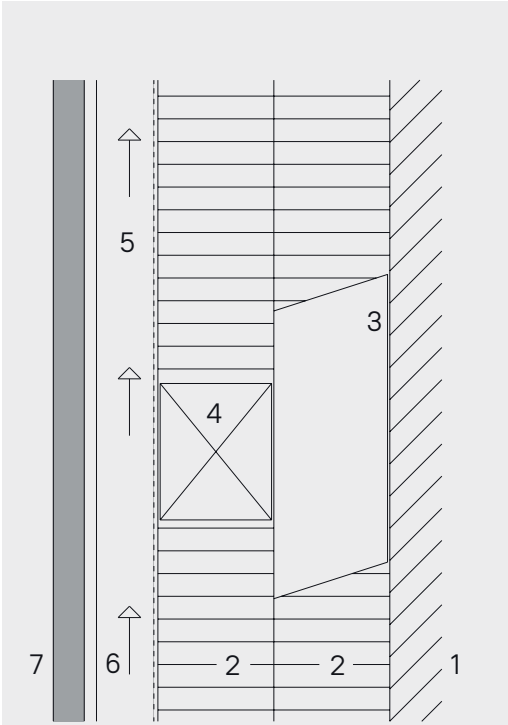

Timber / timber

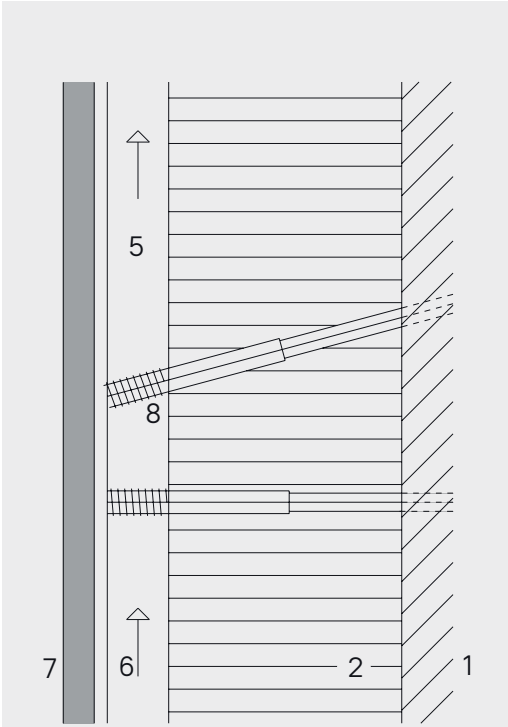

Timber / spacer screw

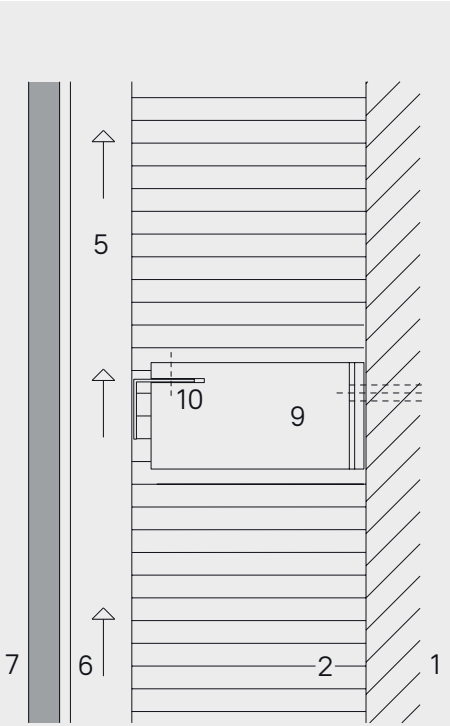

Metal / timber verticals

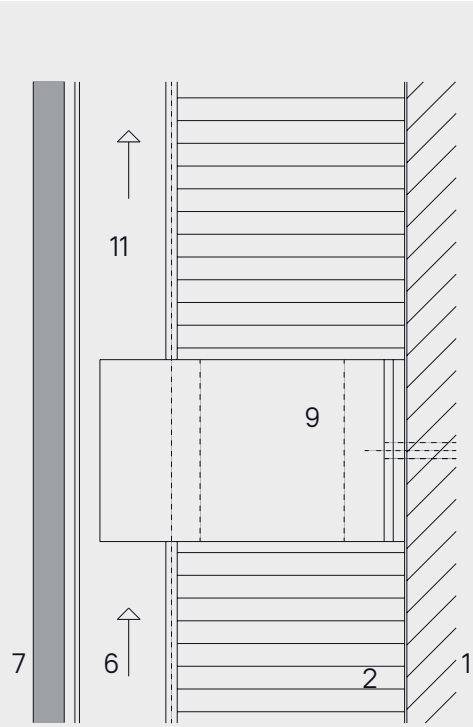

Metal

1 Substrate
2 Thermal insulation
3 Vertical batten
4 Horizontal batten
5 Panel support
6 Ventilation cavity
7 SFIBRAL panel
8 Spacer screw
9 Bracket
10 Horizontal batten
11 Vertical batten

Design

Metal supports

Rivets

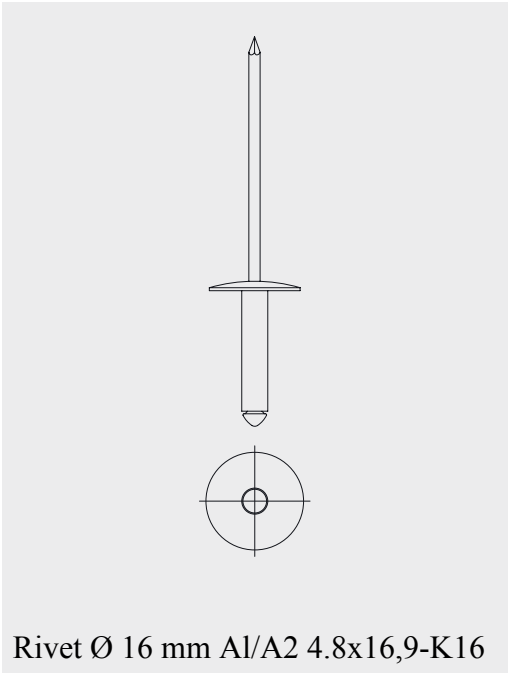

Rivet Ø 16 mm Al/A2 4.8x16,9-K16

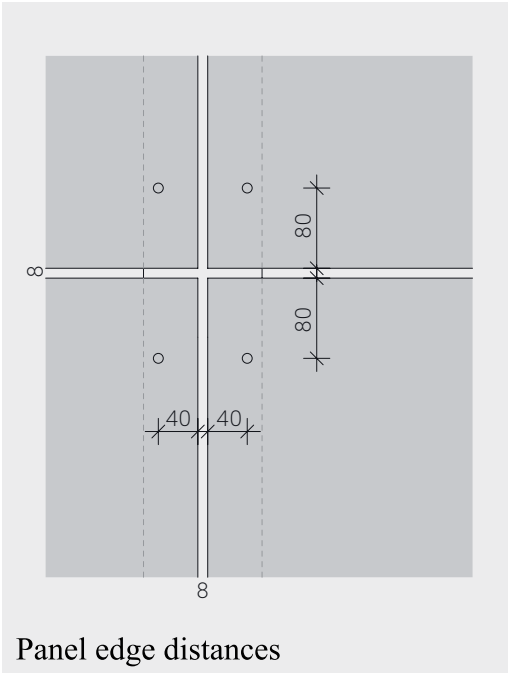

Panel edge distances

Holes for rivets
Diameter 9.5 mm

Standard edge distances
Horizontally 40 mm
Vertically 80 mm

Minimum edge distances
Horizontally 30 mm
Vertically 60 mm

Maximum edge distance
Horizontally and vertically 100 mm

Panel joints
Standard panel joint is 8 / 6 mm. Panel element can be used as spacer. Wider joints will make any inaccuracies in the installation less noticeable.

Fixed, sliding points
Each panel must be fastened by 2 fixed points in the panels center. Fixed points are to support the panels deadload. All other rivets are sliding points.

Drill holes Ø 5 mm to metal profiles
Use centering drill gauge so the holes will be concentric to the Ø 9.5 mm hole in the panel. Use drill bit for drilling profiles.

The sliding point connection is **NOT** meant to accomodate building drift or seismic movement.

Sub-frame engineering
Engineer, structural engineer or contractor are responsible for the design and installation of all sub frame parts including all pertaining fasteners.

Design

Metal supports

Aluminium profiles
Aluminum thickness should be a min. of 2 mm. Profiles should not exceed 3 m and profile breaks should coincide with panel joints.

Aluminium rivet
Al/A2 4.8x16,9-K16
Al/A2 5x18-K14
rivets, head powder coated or blank, grip range 8–13 mm

Staggered horizontal panel joints
Use two vertical profiles to vertical panel joint so that each can be broken on its horizontal panel joint level.

Black (shadow) panel joints
It is recommended to blacken the metal where visible, with paint or PVC paint tape.

Steel profiles
Steel panel supports to be min. gauge 18 (1.27 mm) to obtain nominal pull out value.
Profiles should not be longer than 6 m.

Stainless steel rivet
5x18-K14 rivet, head, powder coated or blank, grip range 9–14 mm

Sub-frame engineering
Engineer, structural engineer or contractor are responsible for the design and installation of all sub frame parts including all pertaining fasteners.

1 SFIBRAL 8 mm
2 Rivet
3 Aluminium support profile
4 Joint flashing (optional)
L = panel width – 2mm
5 Thermal insulation

Horizontal joint

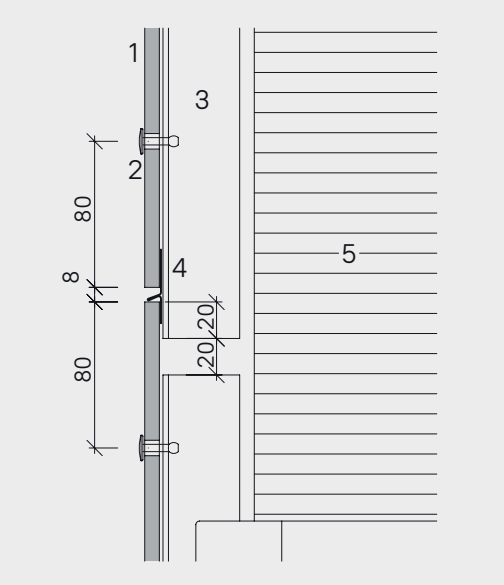

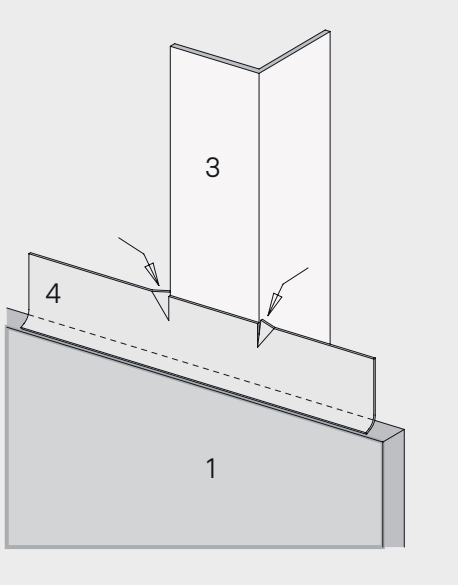

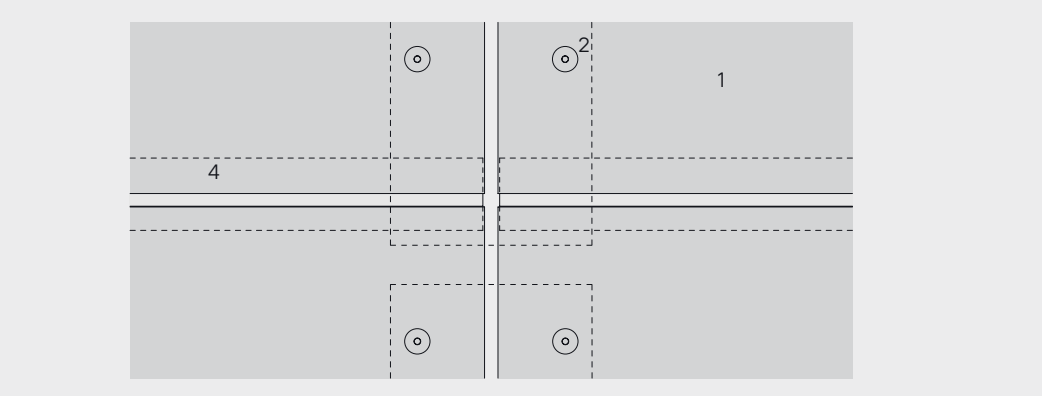

Any breaks to panel support profiles must be located at panel joints as shown. Flashing cut at one vertical as shown to prevent horizontal dislocation of flashing.

Design

Metal supports

Horizontal section

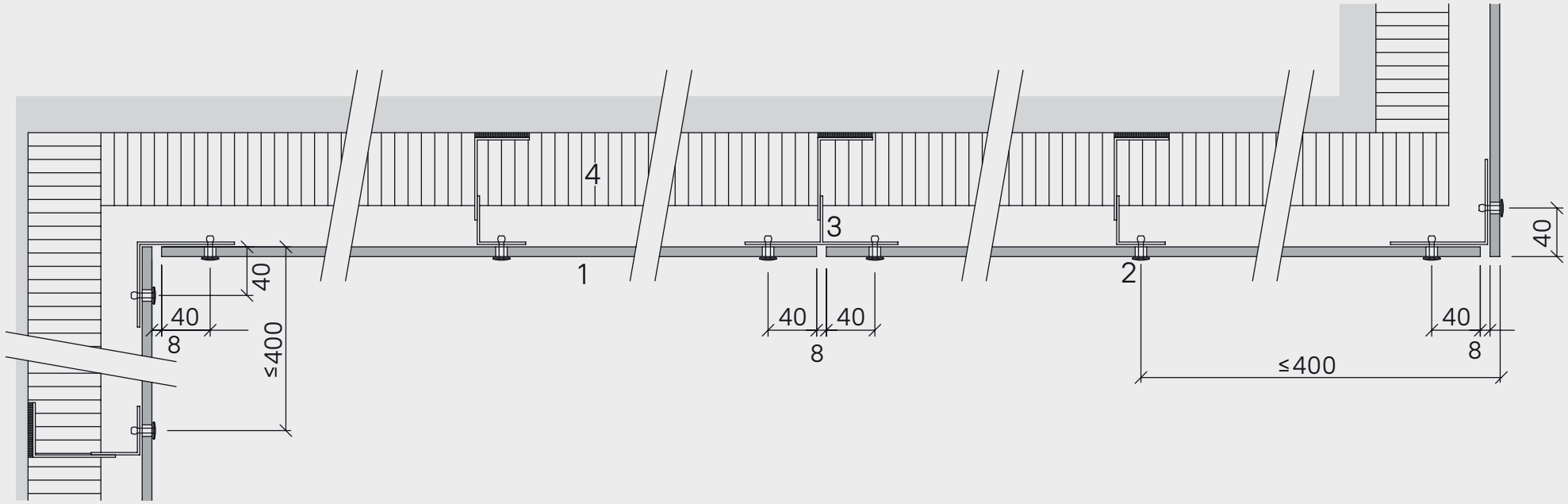

1 SFIBRAL 8 mm
2 Rivet
3 Aluminum profile
4 Thermal insulation

Max. distance between panel supports – 400 mm.

Design

Metal support

Metal sub frame - 8 mm façade panels - rivet distances

Characteristic value of wind suction (according to European standards)		Design value of wind suction (with a safety coefficient of 1.5)		Spacing d (maximal distance between rivets) Vertical panel (portrait)		Horizontal panel (landscape)	
kN/m²	psf	kN/m²	psf	horizontally mm	vertically mm	horizontally mm	vertically mm
- 0.70	- 13.90	- 1.0	- 20.9	600	725	725	530
- 1.00	- 20.90	- 1.5	- 31.3	600	590	675	530
- 1.30	- 26.50	- 1.9	- 39.7	600	490	520	530
- 1.80	- 37.60	- 2.7	- 56.4	400	490	430	370
- 2.30	- 48.70	- 3.5	- 73.1	400	420	400	370
- 2.70	- 55.70	- 4.0	- 83.5	400	330	370	370
- 3.30	- 69.60	- 5.0	- 104.4	300	370	370	280
- 4.00	- 83.50	- 6.0	- 125.3	300	330	330	280

Above table is a guide line for 2 or more fasteners in vertical and horizontal direction. The spacings have been calculated considering a safety factor of 1.5. The spacings originate from 1250x3050 mm full size panels with equal distances between rivets.

Design

Metal supports

Single span panels

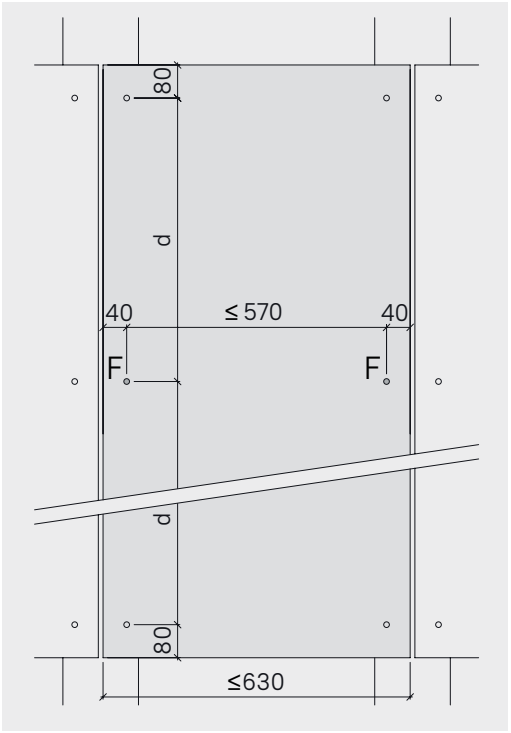

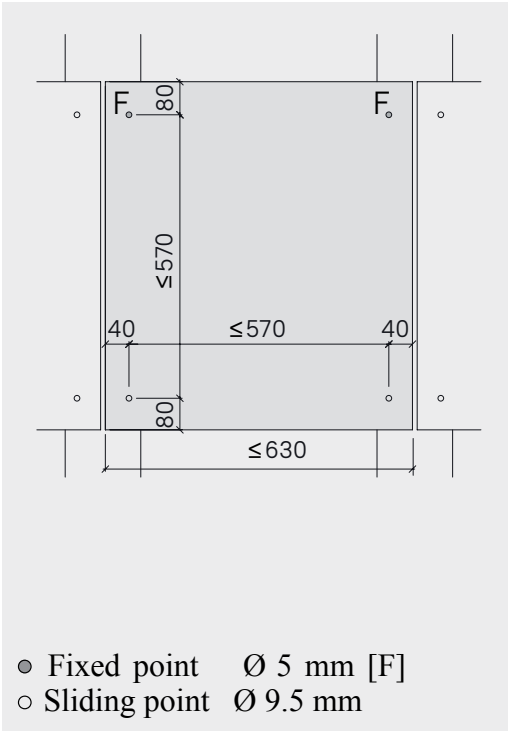

Single span
Fixed point Ø 5 mm [F]
Sliding point Ø 9.5 mm

Soffit panels
Fastener distances for soffit panels and suspended ceilings not to exceed 500 mm.

Max. distance between fasteners for single span panels 600 mm, unless smaller distances is required by high wind load as per table of fastener distances.

If more than 5 single span panels are ad- joining each other - the chain of fixed points must be interrupted by a different configuration of the fixed points.

Consult with structural engineer.

Design

Metal supports

SFIBRAL vertical panel

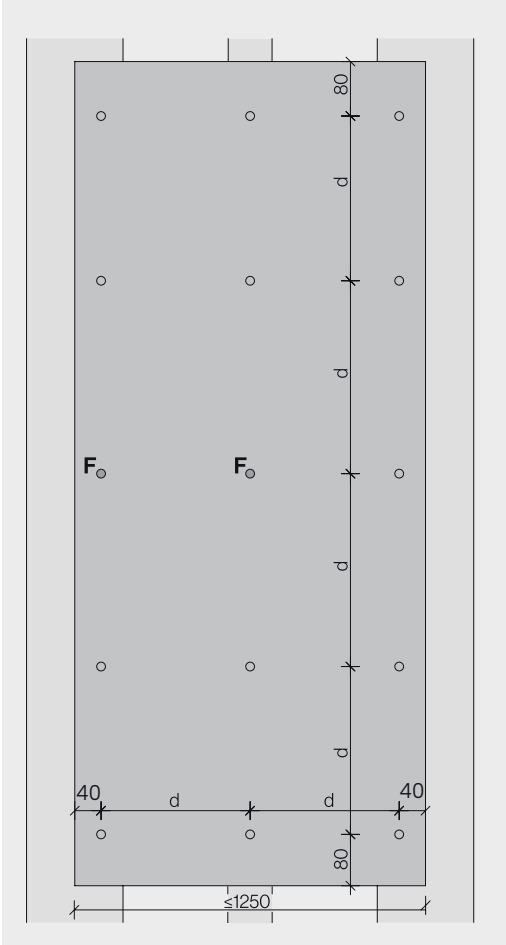

Fixed points [F] center and left.

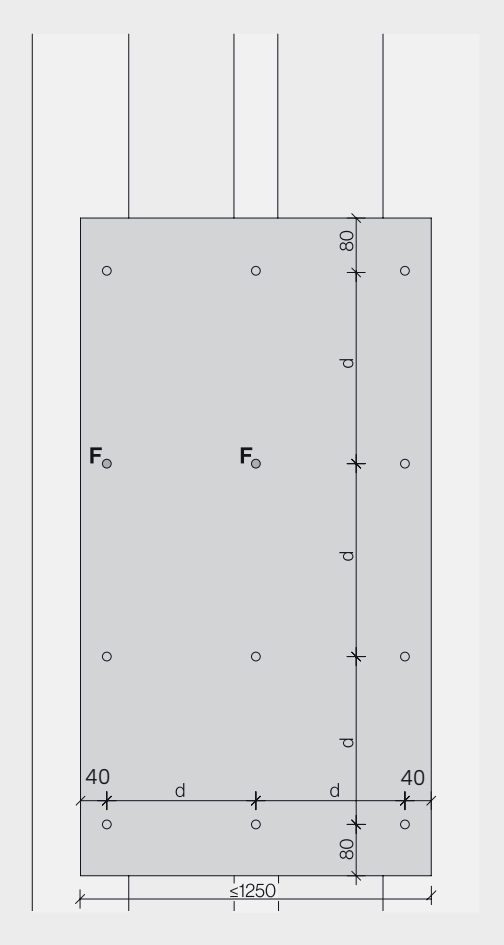

If it is not possible to fasten in the middle of panel, fixed points [F] shall be installed above.

SFIBRAL horizontal panel for odd number of rivets

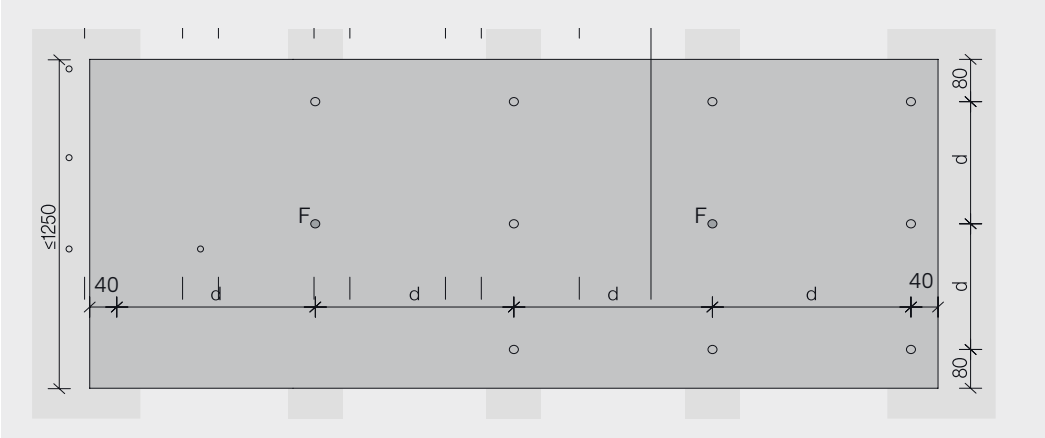

Between fixed points, the max. distance can be 1 sliding point.

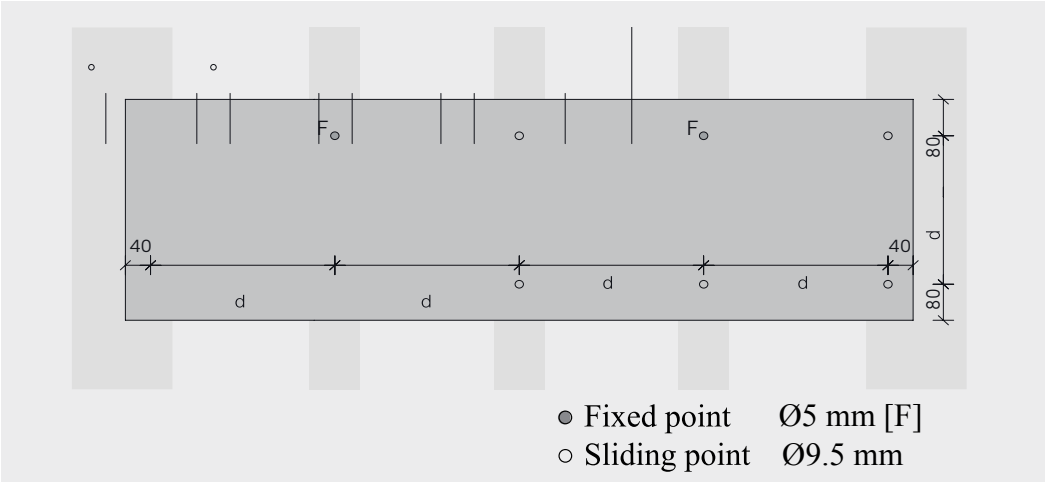

Sample rivet layouts. Final layout to be determined by a local structural engineer.

Design

Metal supports

SFIBRAL horizontal panel for even number of rivets

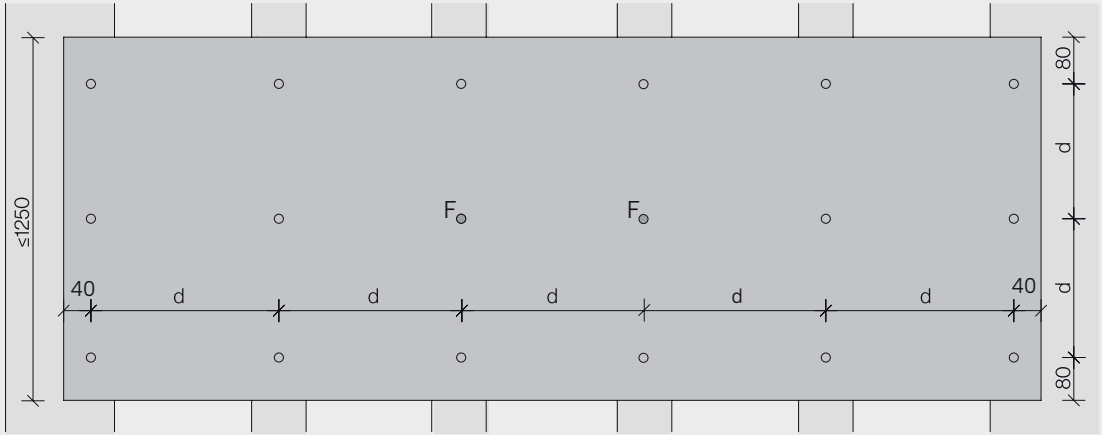

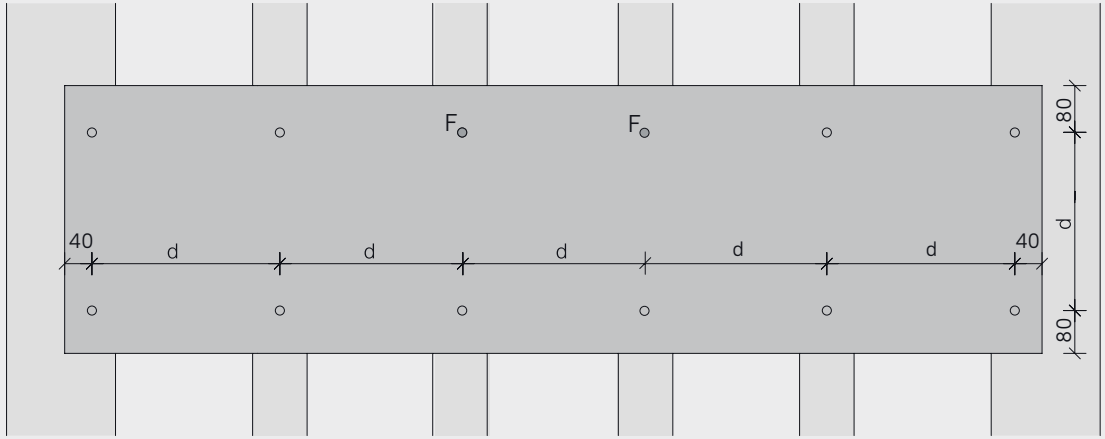

Sample rivet layouts. Final layout to be determined by a local structural engineer.

● Fixed point Ø5 mm [F]
○ Sliding point Ø9.5 mm

Design

Metal supports

Example outer corner

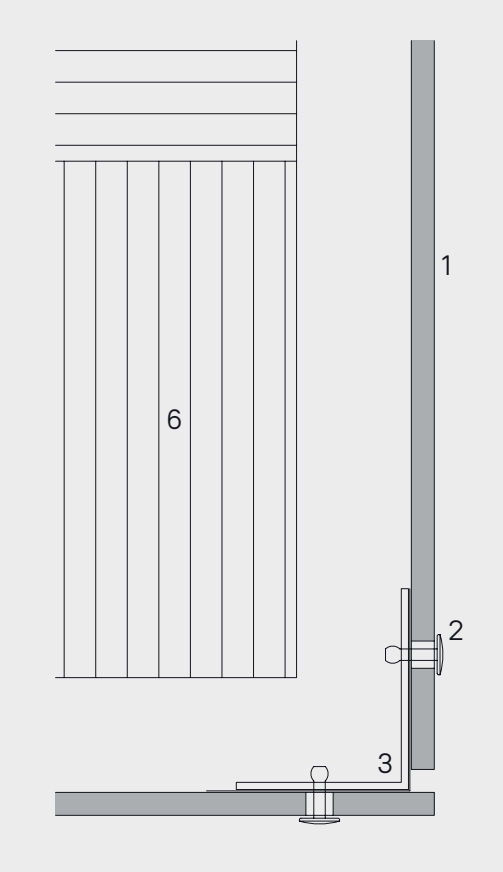

Example inner corner

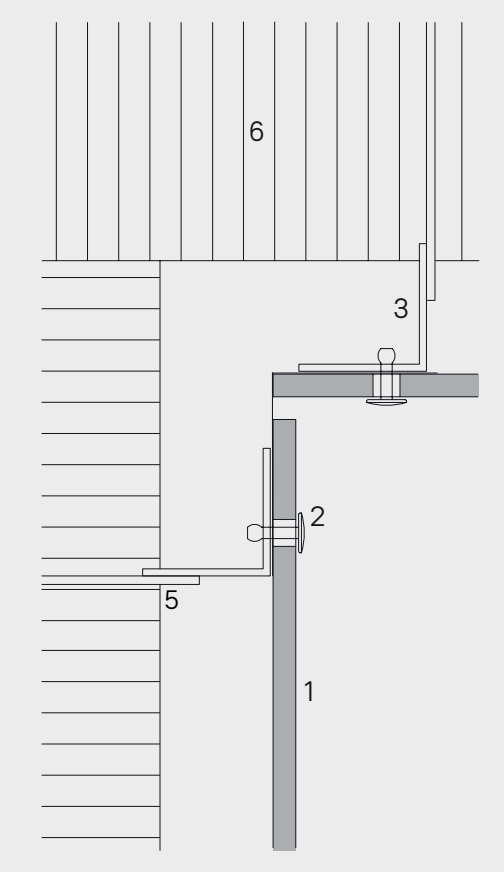

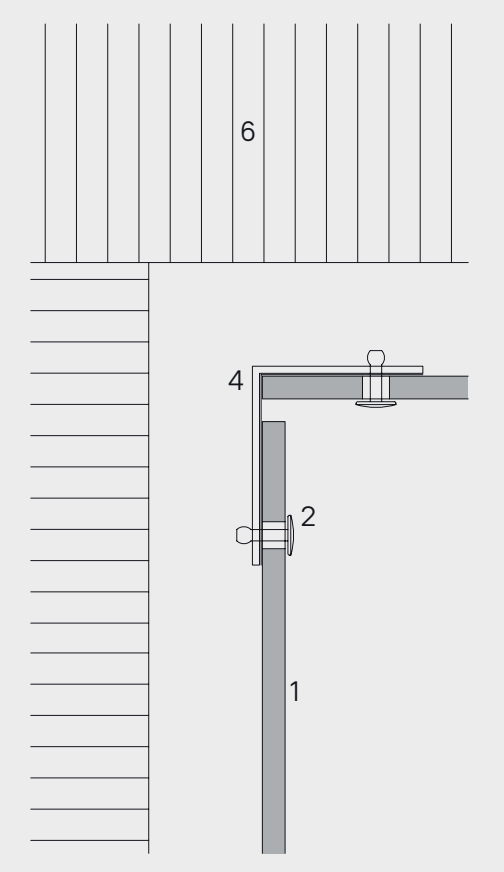

1 SFIBRAL 8 mm panel
2 Rivet 5x18-K14
3 Min. angle 60 x 60 mm
4 Min. angle 70 x 60 mm
5 Bracket
6 Thermal insulation

Corner angle not attached back to building as shown can be cantilevered up to 400 mm.

Design

Metal supports

Example window jamb

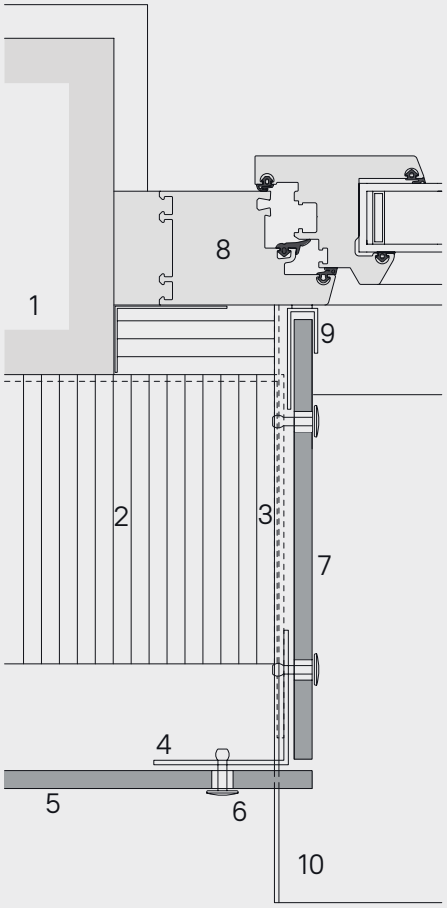

Window jamb with 8 mm panel

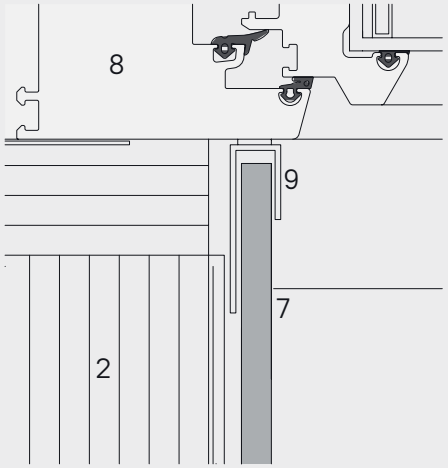

Window jamb with metal frame

1 Exterior wall
2 Thermal insulation
3 Horizontal support
4 Vertical support
5 SFIBRAL 8 / 6 mm panel
6 Rivet 5x18-K14
7 SFIBRAL jamb board 8 mm
8 Window frame
9 U or F-profile with sealant
10 Window sill

Design

Metal supports

Example window sill

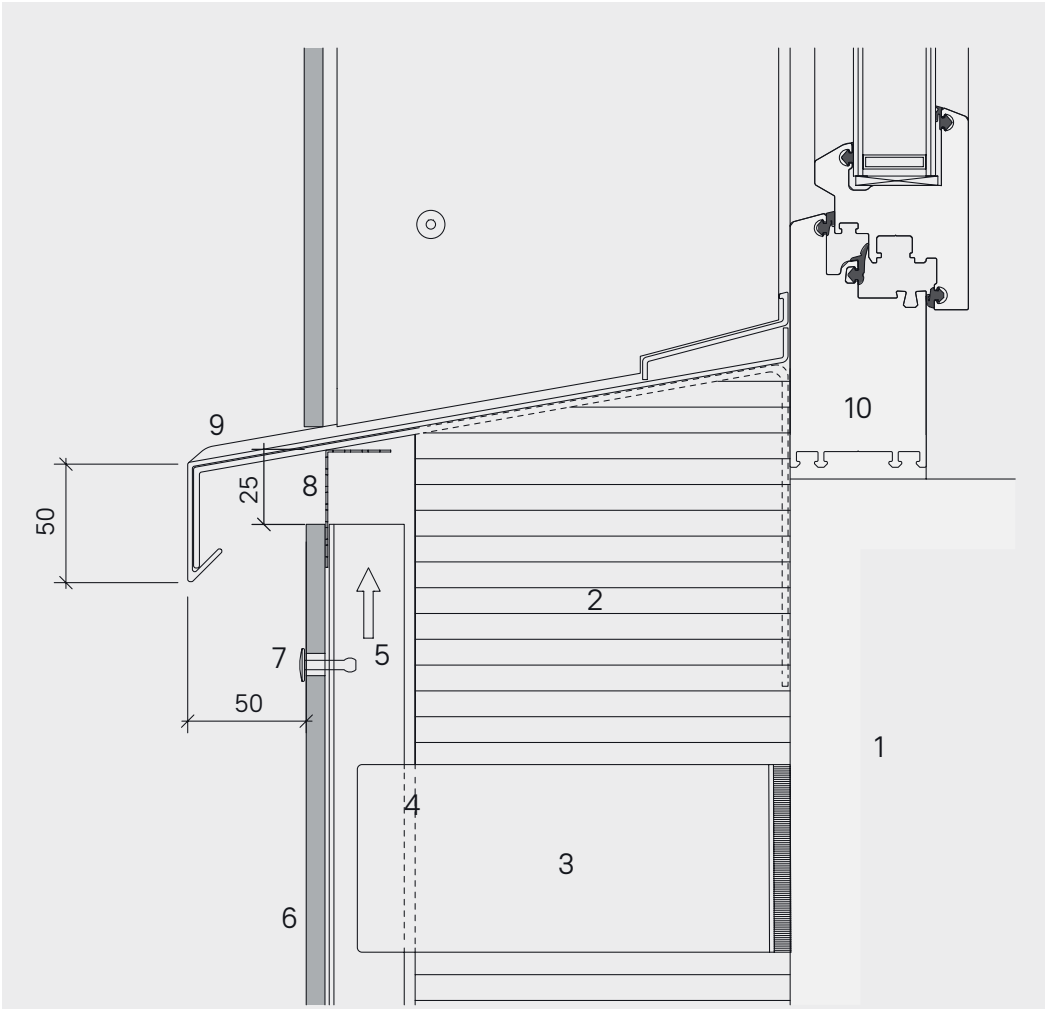

Window sill made of metal

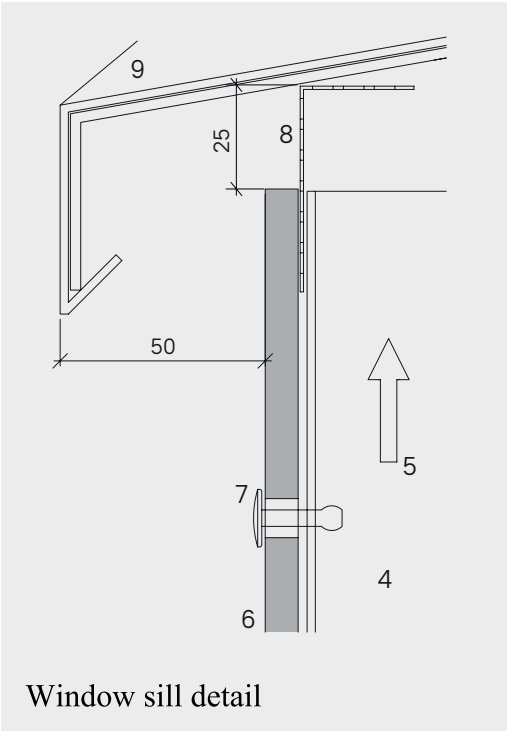

Window sill detail

1 Exterior wall
2 Thermal insulation
3 Bracket
4 Vertical support
5 Ventilation cavity
6 SFIBRAL 8 / 6 mm panel
7 Rivet 5x18-K14
8 Perforated angle
9 Window sill
10 Window frame

Design

Metal supports

Example window head

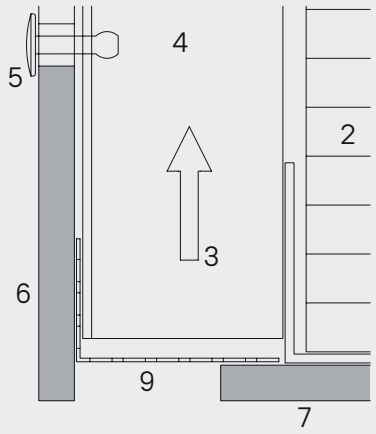

Perforated angle

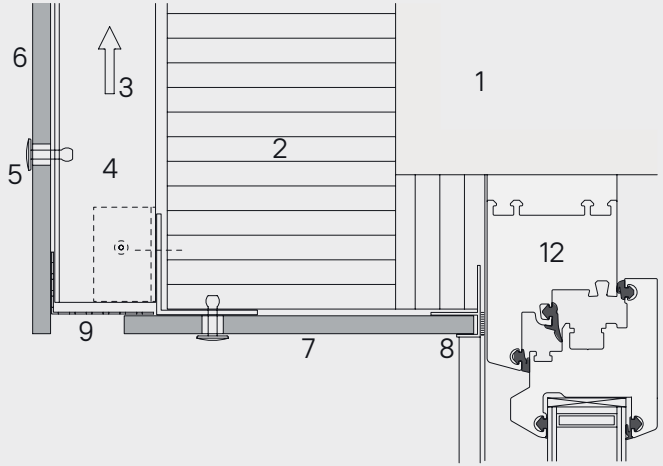

Metal framing around whole window

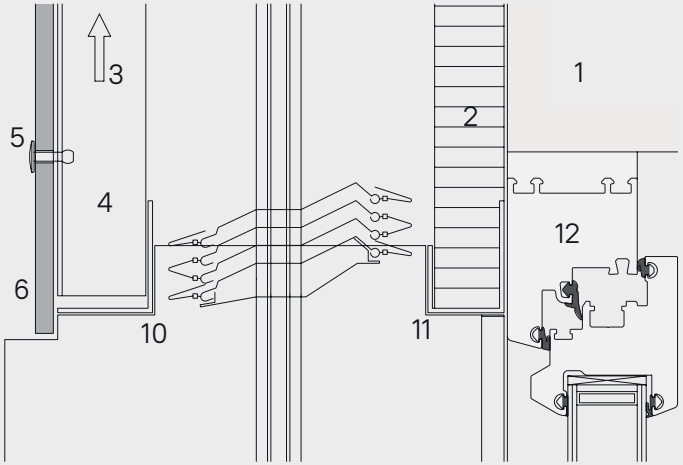

Head detail sun shutter

1 Exterior wall
2 Thermal insulation
3 Ventilation cavity
4 Vertical support
5 Rivet 5x18-K14
6 SFIBRAL 8 / 6 mm panel
7 SFIBRAL 8 / 6 mm panel
8 U or F-profile
9 Perforated angle
10 Reinforcing profile
11 Angle profile insulation
12 Window frame

Design

Metal supports

Example façade bottom detail

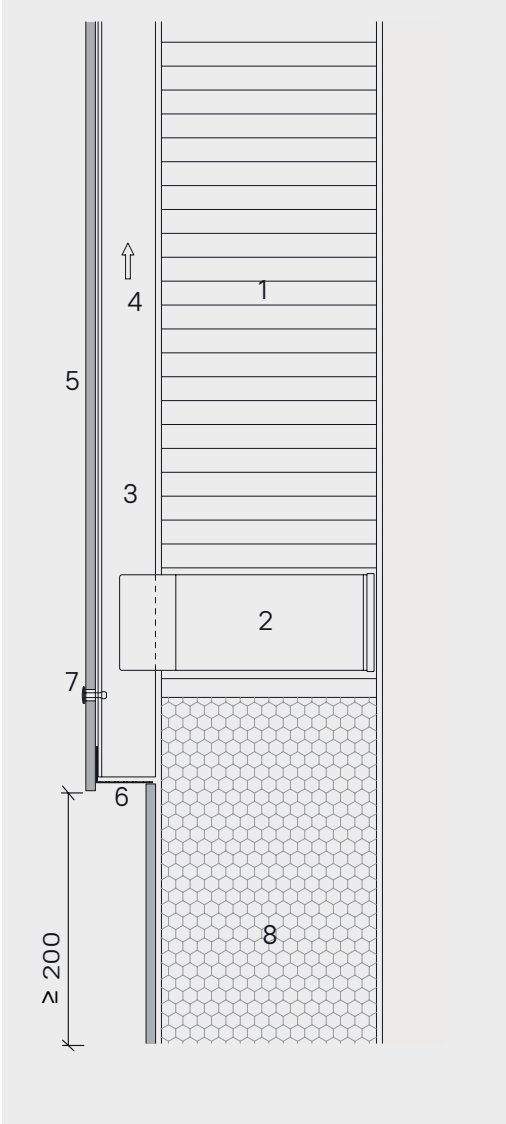

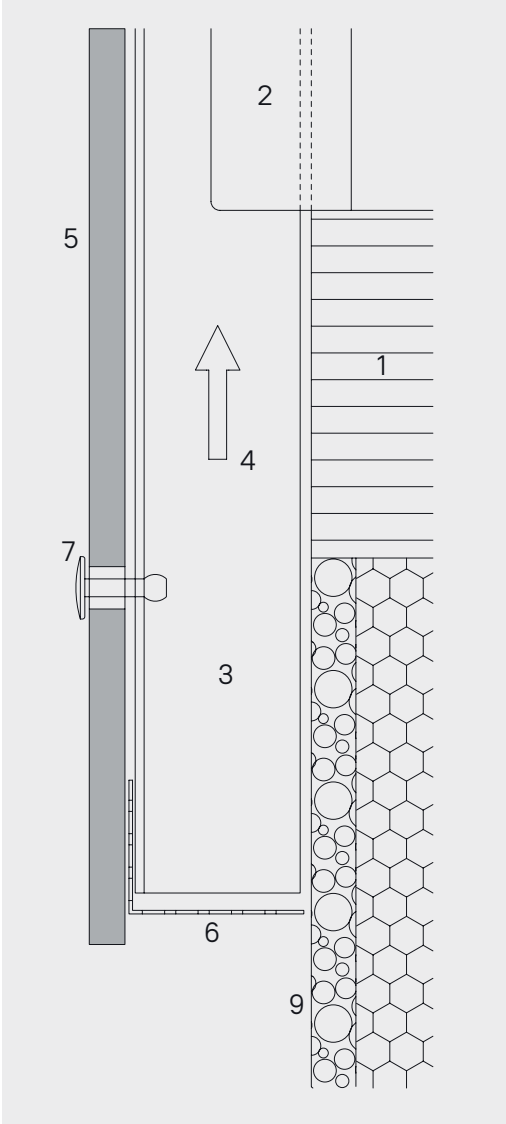

1 Thermal insulation
2 Bracket
3 Vertical support
4 Ventilated cavity
5 SFIBRAL 8 / 6 mm panel
6 Perforated angle
7 Rivet 5x18-K14
8 Thermal insulation
9 Water resistant thermal insulation

In order to avoid damages its advised to keep a minimum distance of 200mm from bottom of the panel to the ground.

Design

Metal supports

Example coping detail

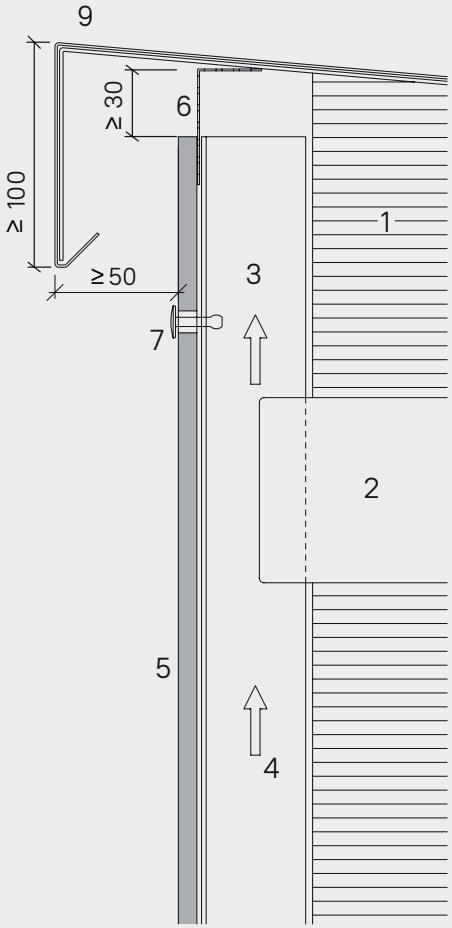

Coping detail

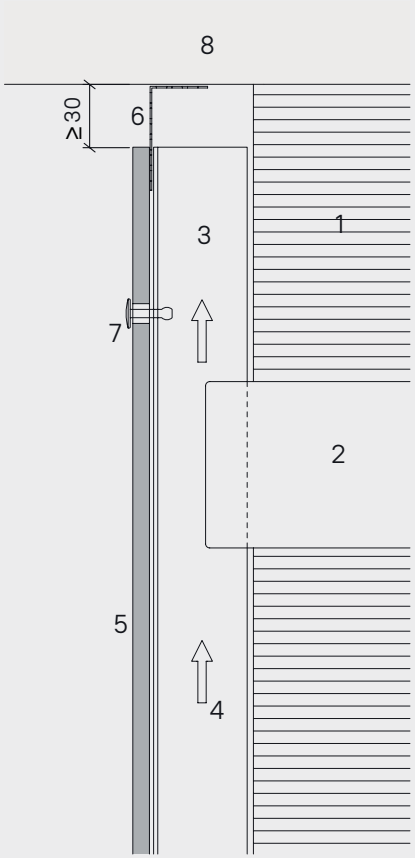

Details under slab

1 Thermal insulation
2 Bracket
3 Vertical support
4 Ventilated cavity
5 SFIBRAL 8 / 6 mm panel
6 Perforated angle
7 Rivet 5x18-K14
8 Soffit
9 Coping

Design

Timber battens

Screw

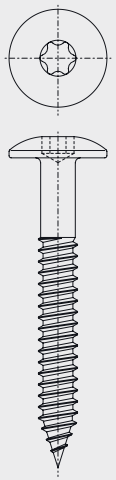

Screw, stainless steel, saucer head Ø 11mm, T20 drive, 4.8×38 mm.

Distances to panel edge

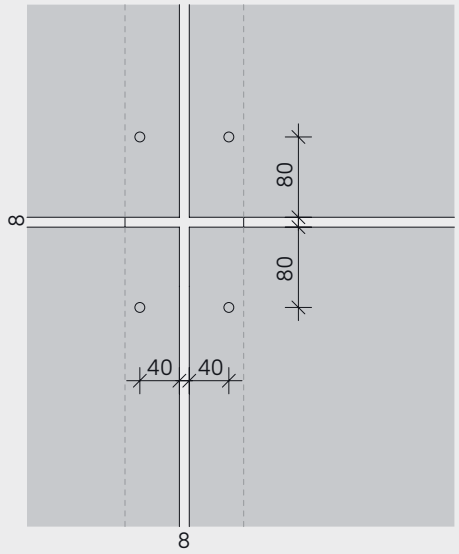

Panel holes
Diameter 5.5 mm

Standard edge distances
Horizontally 40 mm
Vertically 80 mm

Minimum edge distances
Horizontally 30 mm
Vertically 60 mm

Maximum edge distance
Horizontally and vertically max. 100 mm

Panel joints
Standard panel joint is 8 / 6 mm. This allows panel elements to be used as spacers for joints. Wider joints will make any inaccuracies in the installation less noticeable.

Installation
The screws must be installed into the frame with depth stop at 90 degrees. The screw head must rest even to the panel.

Sub-frame engineering
Engineer, structural engineer or contractor are responsible for the design and installation of all sub framing parts including all pertaining fasteners.

Timber battens
Straight grown pine, dry (max. 20% moisture content).

Design

Timber battens

Timber battens
Installation over timber battens is allowed provided the design meets local engineered codes and standards.

Timber quality
Battens must be even:

- Thickness min. 27 mm
- Always use planed surface timber
- Solidity class II (FK II/C24)
- Recommended only using kiln-dried lumber
- Moisture content max. 20%
- Timber must be of equal of higher quality

Vertical battens
At panel joints:
2 x 27 x 60 mm or 1 x 27 x 120 mm
Intermediate supports:
27 x 60 mm

Engineering
Battens including their attachment to be engineered per local standards.

Battens screw
Screw Ø min. 6 mm
Head Ø min. 11 mm
For battens wider than 60 mm use two screws per point of attachment.

Rear ventilation, thermal insulation, moisture proofing, wind proofing layers
All local standards are applicable and must be complied with.

Joint flashing
Horizontal joint L-flashing should be 2 mm shorter than panel. Therefore it is not visible in vertical joints. If required butt joint the flashings on any batten, do not overlap flashing.

L-shape horizontal joint flashings are not 100% waterproof!
Therefore all timber battens must be fully covered by EPDM bands to protect them against moisture and to prevent rotting and the growth of fungi and mold.

EPDM band
All timber battens must be fully covered by EPDM backing bands stapled to the battens. Stapled at the edges of the bands.
EPDM bands to be in one single piece top to bottom or overlapped as per diagram.

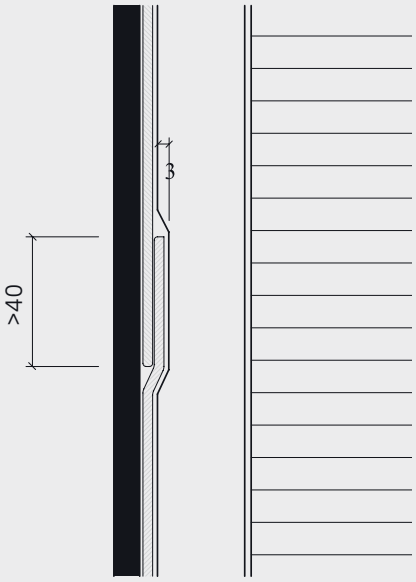

EPDM band overlap

Design

Timber battens

Horizontal panel joint

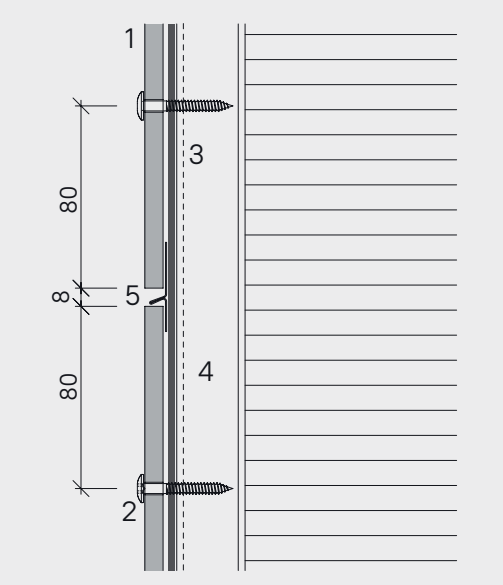

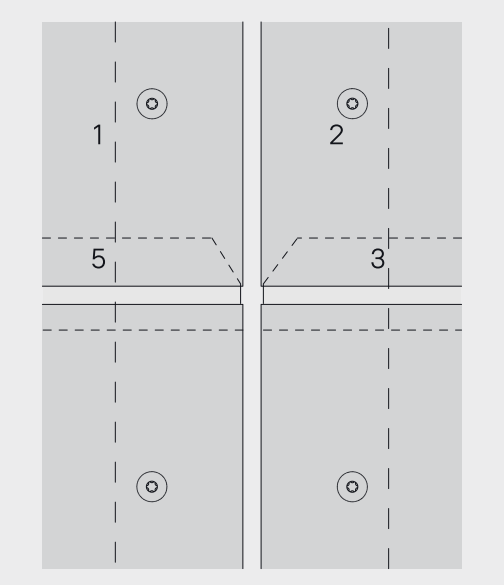

1 SFIBRAL 8 mm
2 Screw
3a EPDM band 60 mm
3b EPDM band 120 mm
3c EPDM band 150 mm
4 Batten 27×60, 27×120 mm
5 Joint L-shape flashing

Horizontal section through vertical battens

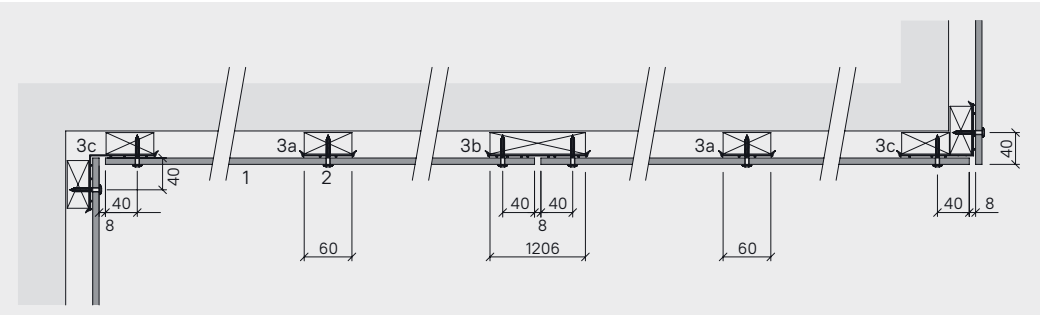

Vertical joint at window

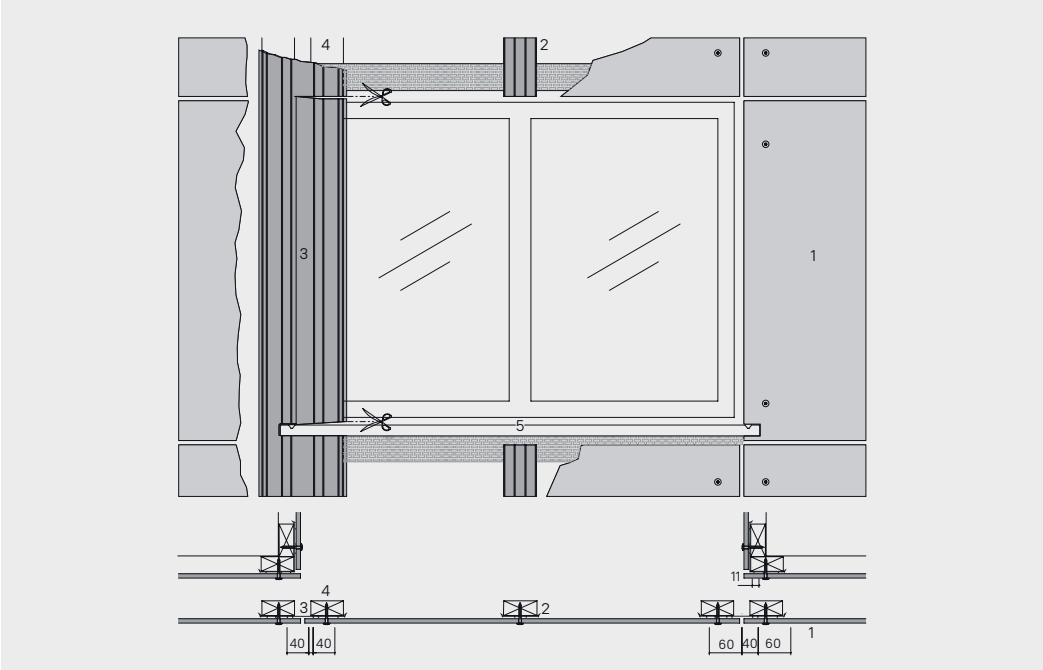

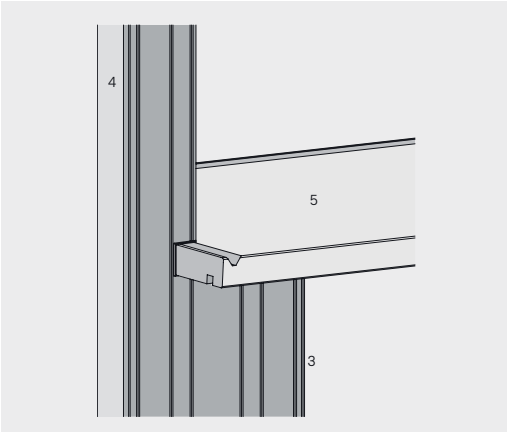

1 SFIBRAL 8 mm
2 EPDM band 60 mm
3 EPDM band 150 mm
4 Batten 27×60 mm
5 SFIBRAL window sill

Design

Timber battens

Timber battens - 8 mm façade panels – screw distances

Characteristic value of wind suction (according to European standards)		Design value of wind suction (with a safety coefficient of 1.5)		Spacing d (maximal distance between screws) Vertical panel (portrait)		Horizontal panel (landscape)	
kN/m²	psf	kN/m²	psf	horizontally mm	vertically mm	horizontally mm	vertically mm
- 0.70	- 13.90	- 1.0	- 20.9	600	750	750	530
- 1.00	- 20.90	- 1.5	- 31.3	600	590	675	530
- 1.30	- 26.50	- 1.9	- 39.7	600	490	520	530
- 1.80	- 37.60	- 2.7	- 56.4	400	490	430	370
- 2.30	- 48.70	- 3.5	- 73.1	400	420	400	370
- 2.70	- 55.70	- 4.0	- 83.5	400	330	370	370
- 3.30	- 69.60	- 5.0	- 104.4	300	370	370	280
- 4.00	- 83.50	- 6.0	- 125.3	300	330	330	280

Above table is a guide line for 2 or more fasteners in vertical and horizontal direction.
The spacings have been calculated considering a safety factor of 1.5.
The spacings originate from 1250x3050 mm full size panels with equal distances between screws.

Design

Timber battens

Single span panel (no intermediate support)

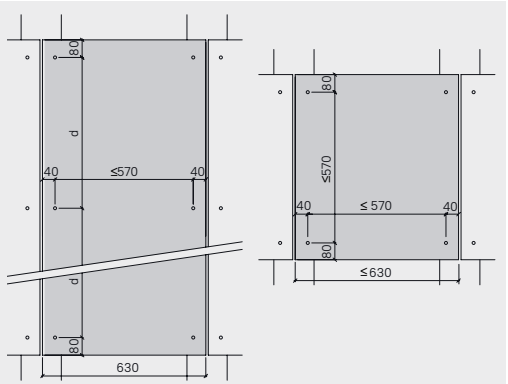

Soffit panels
Fastener distances for soffit panels and suspended ceilings not to exceed 500mm.

Max. distance between fasteners for single span panels 570 mm, unless smaller distance is required by high wind load as per table of fastener distances.

SFIBRAL vertical panel (portrait)

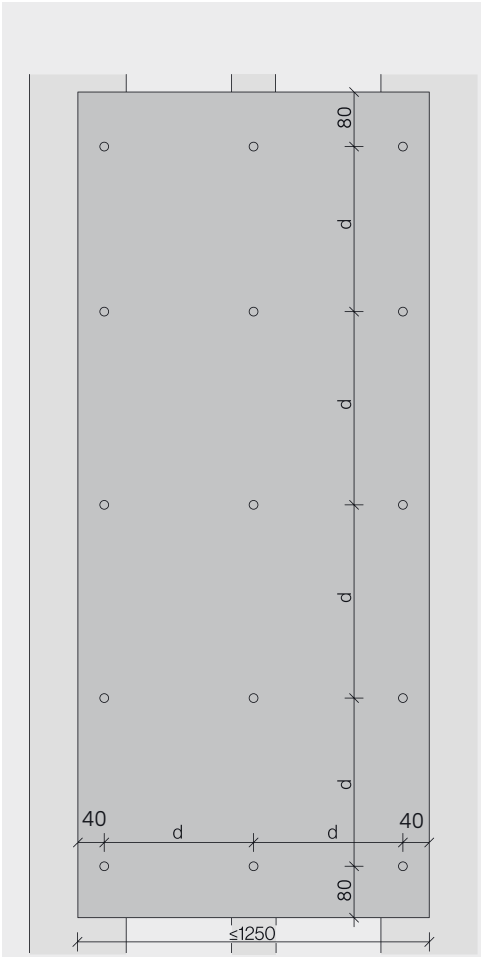

Drill holes Ø 5.5 mm

SFIBRAL horizontal panel (landcape)

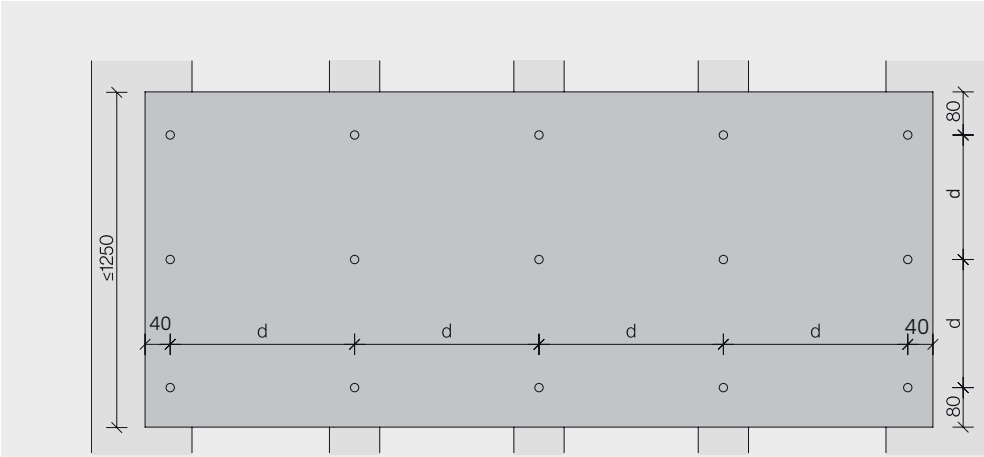

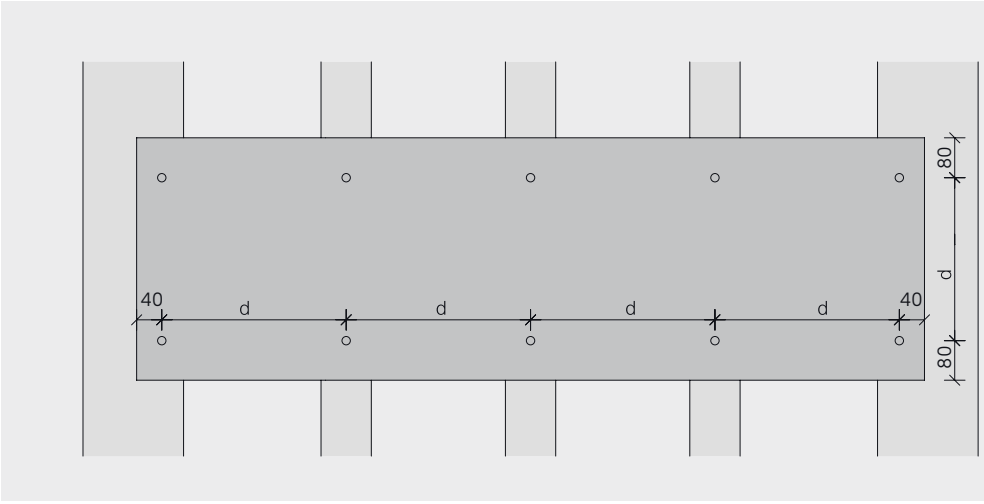

Sample screw layouts, final layout to be determined by a local structural engineer.

Design

Timber battens

**SFIBRAL –
example outer corner**

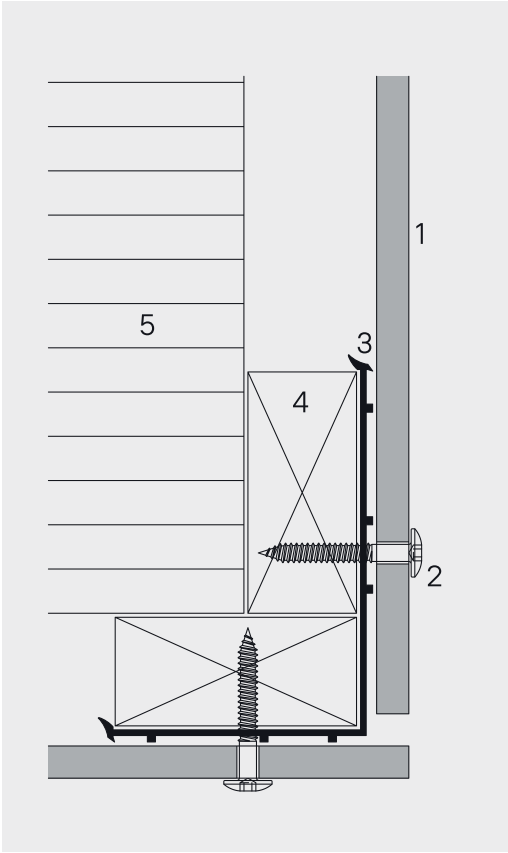

Batten configuration to building corner as shown above with the use of 150 mm EPDM.

**SFIBRAL –
example inner corner**

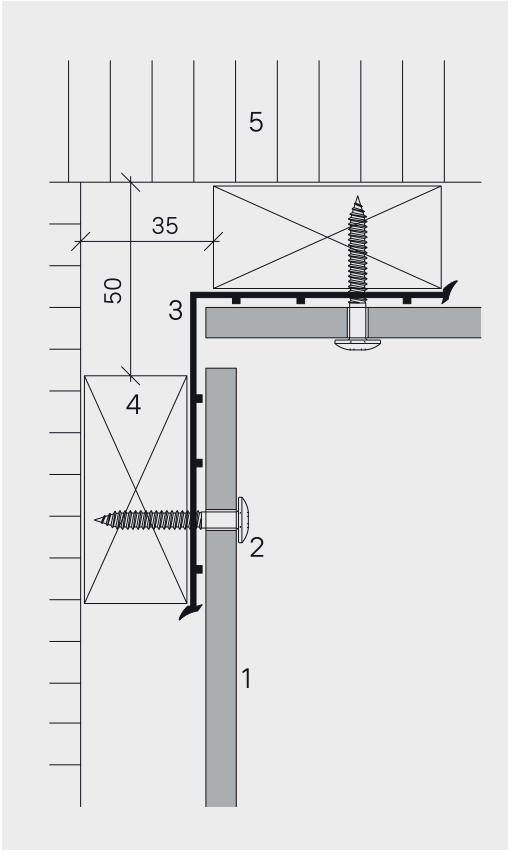

1 SFIBRAL 8 mm panel
2 Screw 4.8×38 mm
3 EPDM band 150 mm
4 Batten 27×60 mm
5 Thermal insulation

Example window jamb

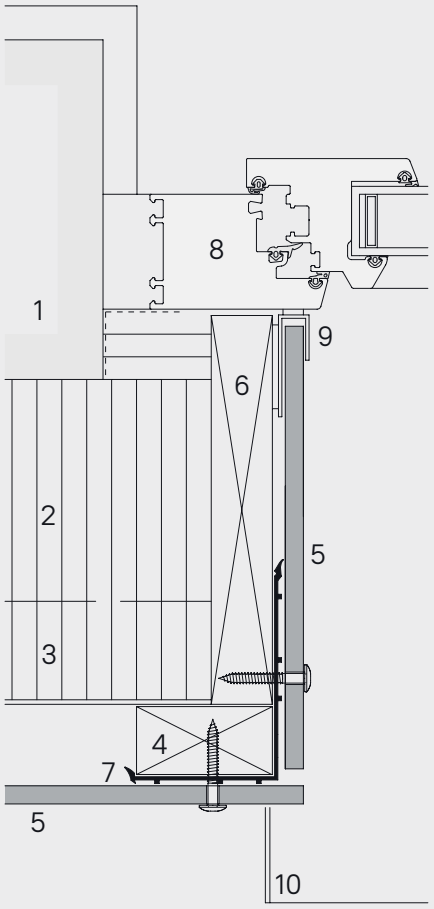

Jamb with 8 mm panels

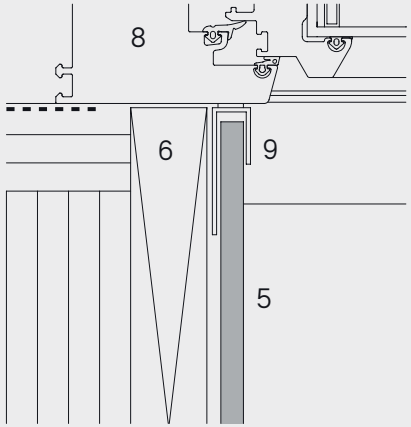

Window detail

1 Exterior wall
2 Thermal insulation
3 Horizontal support
4 Vertical support
5 SFIBRAL 8 mm panel
6 Jamb board
7 EPDM band 150 mm
8 Window frame
9 U or F-profile
10 Window sill

Design

Timber battens

Example window sill

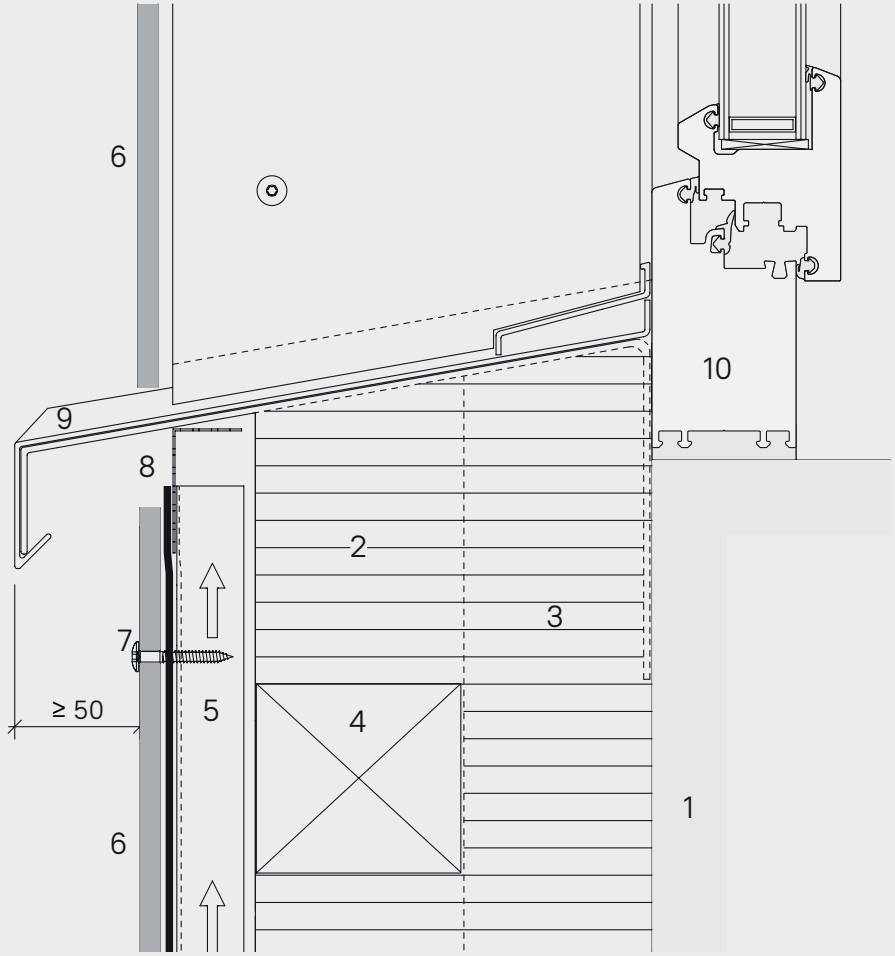

Window sill made of metal

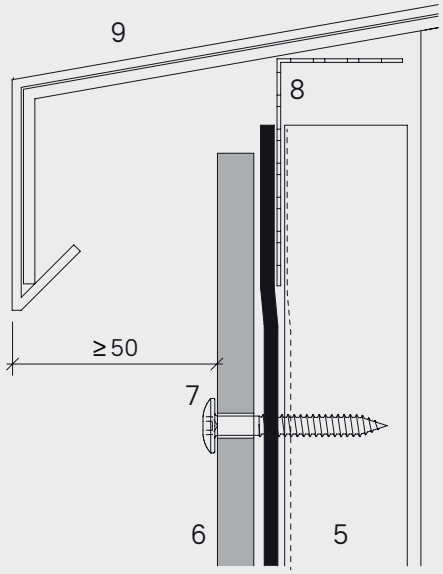

Sill detail

1 Exterior wall
2 Thermal insulation
3 Vertical support
4 Horizontal support
5 Vertical support
6 SFIBRAL 8mm panel
7 Screw 4.8×38 mm
8 Perforated angle
9 Window sill
10 Window frame

Design

Timber battens

Example window head

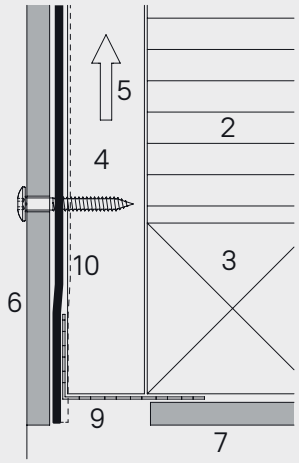

Perforated angle

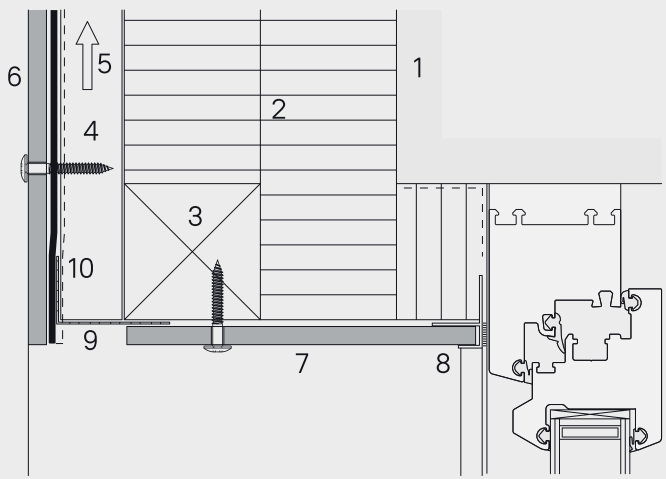

Metal framing around whole window

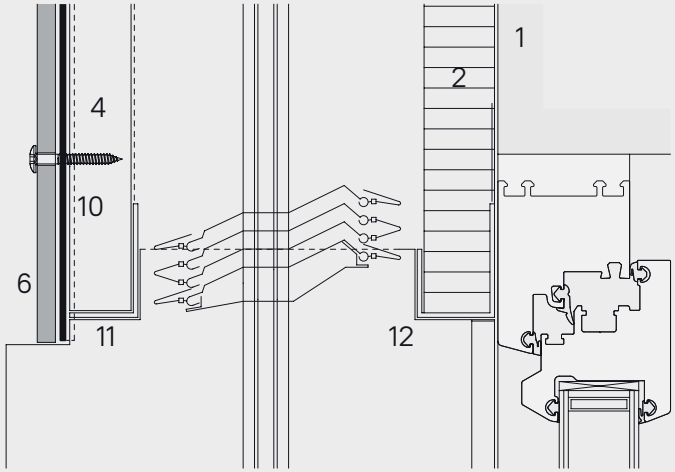

Head detail sun shutter

1 Exterior wall
2 Thermal insulation
3 Horizontal support
4 Vertical support
5 Ventilation cavity
6 SFIBRAL 8 mm panel
7 SFIBRAL 8 mm panel
8 U or F-profile with sealant
9 Perforated angle
10 EPDM band
11 Angle profile
12 Angle profile insulation

Design

Timber battens

Example façade bottom detail

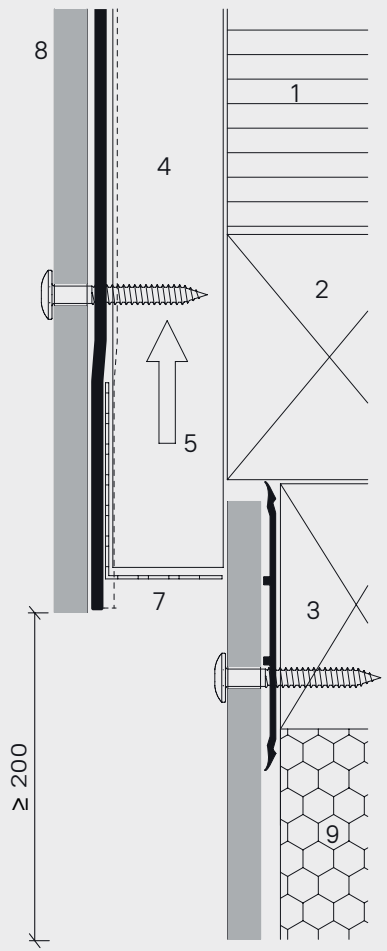

Timber / timber

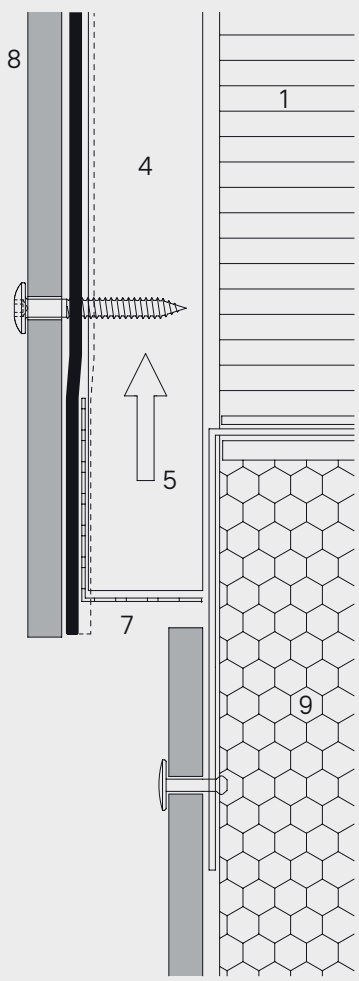

Timber / metal

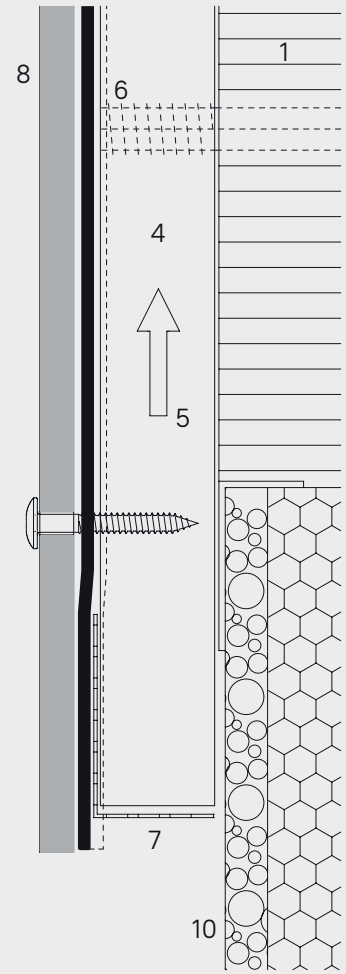

Timber verticals with spacer screw

1 Thermal insulation
2 Horizontal batten
3 Horizontal support
4 Vertical support
5 Ventilated cavity
6 Spacer screw
7 Perforated angle
8 SFIBRAL 8 mm panel
9 Thermal insulation water resistant
10 Thermal insulation

Design

Timber battens

Example coping detail

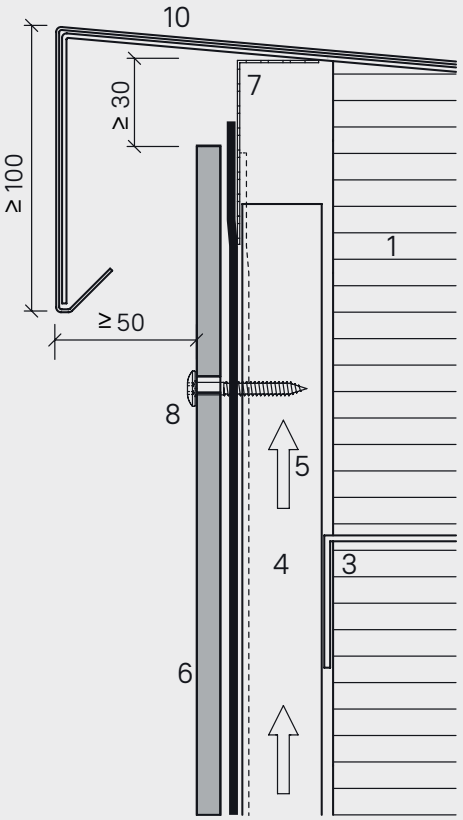

Coping detail

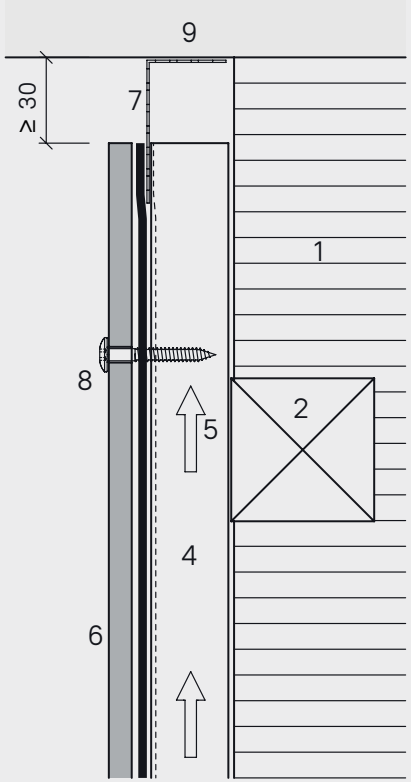

Detail under slab

1 Thermal insulation
2 Horizontal batten
3 Horizontal support
4 Vertical support
5 Ventilated cavity
6 SFIBRAL 8 mm
7 Perforated angle
8 Screw
9 Soffit
10 Coping

Installation

Storage and fabrication on site

On site storage
Pallets must be stored under cover i.e. out of rainfall and direct sunlight. Where this is not possible, store under tarp. Ingress of water into stacked panels will cause permanent staining to panel surface. Excess heat can cause damage to panel surface.

Provisional roofing or tarp covers are to be used in a manner that allows cross ventilation as shown. The panels mounted on the façade are not damaged by moisture, as they have the possibility of ventilation on both sides, but during storage it is necessary to ensure that the panels are not exposed to moisture.

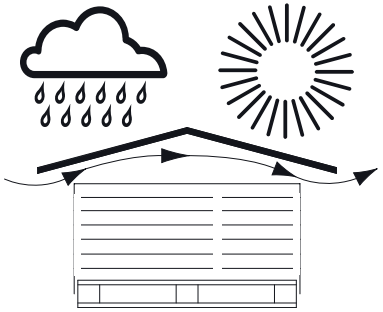

Fabricating panels on site
Always work our with the panels under the roof or provisional tarpaulins.

Panel cutting:

- Use industrial vertical panel saw for large quantities
- For small quantities use circular hand saw with straight edge and dust extraction
- For panel cut outs use jig saw
- Dust from fabricating on site must be removed immediately

Panel cutting:

- Cutting blade supplied by factory or procured locally; considering cutting quality, performance, costs
- Avoid tools which produce fine dust

Stacking panels on site

- Always stack the panels horizontally on pallet base
- Each stack should not be more than 500 mm high (30pcs of 8mm panels)
- Use foam protection layer between the panels (as supplied by factory)
- 5 stacks on top of each other on even surface
- Stacks cannot be put on top of each other if surface is uneven
- Unpacked panels always shall be kept in horizontal position on the pallet base

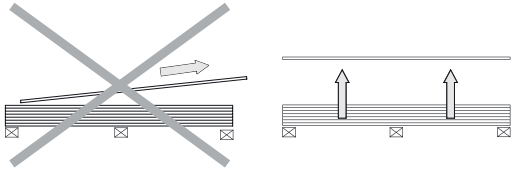

Do not pull panel across.. ... but lift up vertically

Workers working with the board must wear clean gloves in order to prevent stains from dirt, cement dust or grease after working with metal profiles.

Panel drilling
To drill holes in the panels, it is recommended to use drills of the appropriate diameter supplied by the panel supplier, which are especially suitable for drilling fibrous cement - the drill does not slip from the required drilling location, drills quickly, does not burn edges, leaves no chips.
When drilling, the panel must lie on a solid base and not bend. The front side of the panel is drilled. Only drill one panel at a time, it is forbidden to use the forging function. After drilling, the chips must be thoroughly cleaned from the surface of the panel. It is possible to use templates, just make sure that its use does not leave any marks.

Installation

Storage and fabrication on site

Panel cutting

For cutting panels, it is necessary to prepare a stable, solid base table covered with a soft material to prevent scratching the panels. Use dedicated, accurate, non-worn tools with a ruler. Depending on the tools and the type of disc, the plate can be cut with the decorative side up or the internal side up. When starting work, it is necessary to determine which cut will be cleaner while using the available tools.
It is also necessary to test and determine the optimal sawing speed, which must be as slow as possible so that the teeth of the saw used would not chop and would cut cleanly without damaging the panel. Cutting equipment (Festool AXT50 LA Plus or similar) must have a vacuum cleaner that sucks up the vast majority of dust - then dust deposits on the board much less and it ensures quality, healthy and safe operation.

A jigsaw should be used for curved cuts.

Improperly selected tools and discs can lead to crumbled and burnt edges, paint chips and unstable dimensions.

It is not possible to cut several boards at the same time, the board must lie stably, has to be held to prevent vibration.

Edge fabrication

After cutting, the edge near the façade plane must be lightly sanded with sandpaper (grain size 80) on a hard base (wooden) block.

Scrubbing is required to remove the sharp edge, but without rounding it, so scrubbing is done by pressing it gently upright to the edge and swiping once.

It is necessary to perform testing to get a proper result. If the edge is not scrubbed, there is a particularly high probability of paint and material chips when lifting the panel by hand.

After cleaning, panel edges must be impregnated with impregnation liquid Luko supplied by the panel supplier. Before using the impregnation liquid check the expiration date and current temperature conditions. The impregnation liquid is applied with a sponge on the bottle. Any excess that has come into contact with the surface of the panel must be wiped immediately with a clean cloth to remove any stains from the impregnation liquid.

Installation

Panel cleaning on site

Cleaning procedures
Remove dust immediately after fabricating panels.

Dry dust
To be removed with a vacuum cleaner, or with a clean, dry and soft cloth or brush.

Wet dust
Results in staining the panel surface. It must be removed immediately, using plenty of water and a sponge or soft brush.

Dirt removal
After cutting and scrubbing, it is necessary to immediately thoroughly clean all dust and chips from the board using a material that absorbs and does not raise dust (microfiber). It is forbidden to install uncleaned panel; if it will be done on time, white spots of such dust may appear after the rain.

Cleaning of installed panels
Non calcium based stains:
* Use high pressure water at max. 80 bars (minimum distance from panel 25 cm).
Use flat fan spray nozzle, dirt blasters are not allowed. Prior do test on inconspicuous part of cladding

- If required use mild soap or dishwashing liquid. Do not use abrasive or solvent containing cleaning agents
- Do not use glass cleaning detergents!
- Never wash claddings in direct sunlight with alkaline or acid cleaners, as the detergent may cause irreversible stains

Calcium based stains (whitish):

- Apply a mist spray of a solution of 9.5% acetic acid and water
- Allow to react a few minutes but do not let dry out
- Use high pressure cold water to rinse cladding

Repeate the process on difficult stains.

Cleaning during service life
Normally no cleaning will be needed since the rain will periodically wash away dust, environmental dirt, etc. However, if particular environmental conditions lead to a dirty surface, wash with garden hose or high pressure cold water.

Organic growth
Remove algae / fungii with a 5% solution of hydrogen peroxide (H2O2) to eliminate all spores.

Masking tape
For the use of masking tape on panels it should be noted that most common masking tapes are not resistant to UV rays.

Such tapes leave behind glue residues, that cannot be removed without causing damage to panel surface. However the use of the following masking tapes is recommended:

- Masking tape 3M Blue 2090 for temporary application (1 - 2 weeks)
- Masking tape 3M Gold 244 for longer term application

Installation

Fabrication and tools

Panel fabrication on site
For long cuts use multifunction table with circular hand saw, guide rail and dust extractor. Saw blade supplied by panel manufacturer or at own choice.

Cut outs
For smaller cut outs or odd shapes use jig saw.

For drilling on site use spiral drill bits Ø 9.5 / Ø 5.5 mm (metal /timber supports) with carbide metal tips supplied by panel manufacturer or procured locally.

Tools

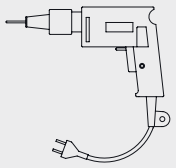
Drill

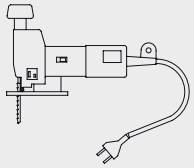
Jig saw

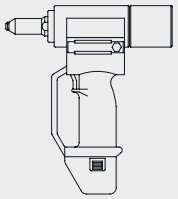
Rivet gun

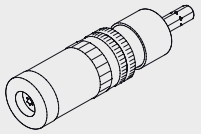
Depth stop (mandatory for timber sub-frame)

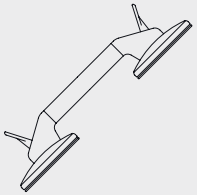
Vacuum handle with silicone cups (Keep silicone cups clean during installation to prevent scratching panels)

Center drill gauge

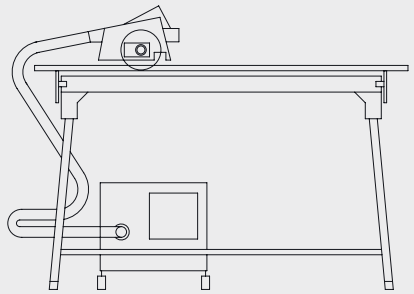
Circular hand saw with guide rail and dust extraction